Electrolux PROFESSIONAL

# SkyLine Premium Natural Gas Combi Oven 20GN1/1, boiler AISI 316L

ITEM #

MODEL #

NAME #

SIS #

AIA #

**217868 (ECOG201B3G31)** SkyLine Premium Combi Boiler Oven with digital control, 20x1/1GN, gas, programmable, automatic cleaning, boiler in AISI 316L, 3-glass door

## Short Form Specification

**Item No.**

Combi oven with digital interface with guided selection.
- Built-in steam generator (in s/s 316L) with real humidity control based upon Lambda Sensor.
- OptiFlow air distribution system to achieve maximum performance with 5 fan speed levels.
- SkyClean: Automatic and built-in self cleaning system with integrated descale of the steam generator. metterei 4 automatic cycles (short, medium, intensive, rinse) .
- Cooking modes: Programs (a maximum of 100 recipes can be stored); Manual (steam, combi and convection cycles); EcoDelta cooking cycle; Regeneration cycle.
- Automatic backup mode to avoid downtime.
- USB port to download HACCP data, programs and settings
- Connectivity for real time access, HACCP, recipe and energy management (optional)
- Single sensor core temperature probe.
- Triple-glass door with double LED lights line.
- Stainless steel construction throughout.
- Supplied with n.1 trolley rack 1/1 GN, 63 mm pitch.
- Adjustable levelling feet.

**APPROVAL:**

## Main Features

- Single sensor core temperature probe included.
- Built-in steam generator for highly precise humidity and temperature control according to the chosen settings.
- Real humidity control based upon Lambda Sensor to automatically recognize quantity and size of food for consistent quality results.
- Dry, hot convection cycle (25 °C - 300 °C): ideal for low humidity cooking.
- Short cleaning cycle: optimized cleaning cycle with a duration of just 33 minutes, improving efficiency and reducing downtime.
- Combination cycle (25 °C - 300 °C): combining convected heat and steam to obtain humidity controlled cooking environment, accelerating the cooking process and reducing weight loss.
- Low temperature Steam cycle (25 °C - 99 °C): ideal for sous-vide, re-thermalization and delicate cooking.
  Steam cycle (100 °C): seafood and vegetables.
  High temperature steam (101 °C - 130 °C).
- SkyClean: Automatic and built-in self cleaning system with 4 automatic cycles (short, medium, intensive, rinse) and integrated descale of the steam generator.
- 6-point multi sensor core temperature probe for maximum precision and food safety (optional accessory).
- EcoDelta cooking: cooking with food probe maintaining preset temperature difference between the core of the food and the cooking chamber.
- Pre-set program for Regeneration, ideal for banqueting on plate or rethermalizing on tray.
- Programs mode: a maximum of 100 recipes can be stored in the oven's memory, to recreate the exact same recipe at any time. 4-step cooking programs also available.
- OptiFlow air distribution system to achieve maximum performance in chilling/heating eveness and temperature control thanks to a special design of the chamber.
- Fan with 5 speed levels from 300 to 1500 RPM and reverse rotation for optimal evenness. Fan stops in less than 5 seconds when door is opened.
- Automatic fast cool down and pre-heat function.
- Back-up mode with self-diagnosis is automatically activated if a failure occurs to avoid downtime.
- GreaseOut: integrated grease drain and collection kit (to use the kit, the oven must be ordered as special code).
- Electrolux Professional recommends the use of treated water to guarantee optimal cooking results and extend the life of the appliance. Check local water condition to select the appropriate water filter. More info available on the website.

# SkyLine Premium
# Natural Gas Combi Oven 20GN1/1, boiler AISI 316L

## Construction

- Boiler in 316L AISI to protect against corrosion.
- Triple thermo-glazed door with 2 hinged inside panels for easy cleaning and double LED lights line.
- Hygienic internal chamber with all rounded corners for easy cleaning.
- 304 AISI stainless steel construction throughout.
- Front access to control board for easy service.
- IPX5 spray water protection certification for easy cleaning.

## User Interface & Data Management

- Connectivity for remote real time access, easy HACCP management, equipment uptime increase, consumption tracking and energy management (requires optional accessory).
- Digital interface with LED backlight buttons with guided selection.
- USB port to download HACCP data, share cooking programs and configurations. USB port also allows to plug-in sous-vide probe (optional accessory).

## Sustainability

- Human centered design with 4-star certification for ergonomics and usability.
- Wing-shaped handle with ergonomic design and hands-free opening with the elbow, making managing trays simpler. Protected by registered design (EM003143551 and related family).
- Energy Star 2.0 certified product.
- The outer cardboard packaging is made from 70% recycled materials and FSC*-certified paper, printed with eco-friendly, water-based ink to support sustainability and environmental responsibility.

  (*Forest Stewardship Council is the world's leading organization for sustainable forest management).
- Triple-glass door minimize your energy loss.*

  *Approx. -10% of idle energy consumption in convection based on test in compliance with ASTM Standard F2861-20
- Uses 33% less water, 43% less detergent and 25% less energy with the new washing cycles.*

  *Based on Internal test done in Electrolux Professional Laboratory comparing actual SkyLine 20 GN1/1 electric combi oven with boiler vs the previous version.
- Save energy, water, detergent and rinse aid with SkyClean green functions.
- C22 and C25 detergents are formulated without phosphates and phosphorus (C25 is also maleic acid-free), making them safe for both the environment and human health.
- Reduced power function for customized slow cooking cycles.

## Included Accessories

- 1 of Trolley with tray rack, 20 GN 1/1, 63mm pitch — PNC 922753

## Optional Accessories

- External reverse osmosis filter for single tank Dishwashers with atmosphere boiler and Ovens — PNC 864388 ❑
- Water filter with cartridge and flow meter for high steam usage (combi used mainly in steaming mode) — PNC 920003 ❑
- Water filter with cartridge and flow meter for medium steam usage — PNC 920005 ❑
- Pair of AISI 304 stainless steel grids, GN 1/1 — PNC 922017 ❑
- Pair of grids for whole chicken (8 per grid - 1,2kg each), GN 1/1 — PNC 922036 ❑
- AISI 304 stainless steel grid, GN 1/1 — PNC 922062 ❑
- Grid for whole chicken (4 per grid - 1,2kg each), GN 1/2 — PNC 922086 ❑
- External side spray unit (needs to be mounted outside and includes support to be mounted on the oven) — PNC 922171 ❑
- Baking tray for 5 baguettes in perforated aluminum with silicon coating, 400x600x38mm — PNC 922189 ❑
- Baking tray with 4 edges in perforated aluminum, 400x600x20mm — PNC 922190 ❑
- Baking tray with 4 edges in aluminum, 400x600x20mm — PNC 922191 ❑
- Pair of frying baskets — PNC 922239 ❑
- AISI 304 stainless steel bakery/pastry grid 400x600mm — PNC 922264 ❑
- Grid for whole chicken (8 per grid - 1,2kg each), GN 1/1 — PNC 922266 ❑
- Grease collection tray, GN 1/1, H=100 mm — PNC 922321 ❑
- Kit universal skewer rack and 4 long skewers for Lenghtwise ovens — PNC 922324 ❑
- Universal skewer rack — PNC 922326 ❑
- 4 long skewers — PNC 922327 ❑
- Grease collection tray, GN 1/1, H=40 mm — PNC 922329 ❑
- Volcano Smoker for lengthwise and crosswise oven — PNC 922338 ❑
- Multipurpose hook — PNC 922348 ❑
- Grid for whole duck (8 per grid - 1,8kg each), GN 1/1 — PNC 922362 ❑
- Thermal cover for 20 GN 1/1 oven and blast chiller freezer — PNC 922365 ❑
- Wall mounted detergent tank holder — PNC 922386 ❑
- USB single point probe — PNC 922390 ❑
- Quenching system update for SkyLine Ovens 20GN — PNC 922420 ❑
- IoT module for OnE Connected and SkyDuo (one IoT board per appliance - to connect oven to blast chiller for Cook&Chill process). — PNC 922421 ❑
- Connectivity router (WiFi and LAN) — PNC 922435 ❑
- ELEVATING KIT WITH TROLLEY HEIGHT EXTENSION FOR 20GN1/1 OVEN — PNC 922446 ❑
- External connection kit for liquid detergent and rinse aid — PNC 922618 ❑
- Dehydration tray, GN 1/1, H=20mm — PNC 922651 ❑
- Flat dehydration tray, GN 1/1 — PNC 922652 ❑
- Heat shield for 20 GN 1/1 oven — PNC 922659 ❑
- Kit to convert from natural gas to LPG — PNC 922670 ❑
- Kit to convert from LPG to natural gas — PNC 922671 ❑
- Flue condenser for gas oven — PNC 922678 ❑
- Trolley with tray rack, 15 GN 1/1, 84mm pitch — PNC 922683 ❑
- Kit to fix oven to the wall — PNC 922687 ❑



The company reserves the right to make modifications to the products without prior notice. All information correct at time of printing.

2025.10.03

| | | |
|---|---|---|
| • Adjustable wheels for 20 GN 1/1 and 20 GN 2/1 ovens | PNC 922701 | ❑ |
| • 4 flanged feet for 20 GN , 2", 100-130mm | PNC 922707 | ❑ |
| • Mesh grilling grid, GN 1/1 | PNC 922713 | ❑ |
| • Probe holder for liquids | PNC 922714 | ❑ |
| • Levelling entry ramp for 20 GN 1/1 oven | PNC 922715 | ❑ |
| • Exhaust hood with fan for 20 GN 1/1 oven | PNC 922730 | ❑ |
| • Exhaust hood without fan for 20 1/1GN oven | PNC 922735 | ❑ |
| • Stainless steel drain kit for 20 GN oven, dia=50mm | PNC 922738 | ❑ |
| • Plastic drain kit for 20 GN oven, dia=50mm | PNC 922739 | ❑ |
| • Holder for trolley handle (when trolley is in the oven) for 20 GN oven | PNC 922743 | ❑ |
| • Tray for traditional static cooking, H=100mm | PNC 922746 | ❑ |
| • Double-face griddle, one side ribbed and one side smooth, 400x600mm | PNC 922747 | ❑ |
| • Hood Hopper to directly connect the Hood to the centralized ventilation system, for Standard Hoods (with fan motor) and Hoods without fan motor | PNC 922751 | ❑ |
| • Trolley with tray rack, 20 GN 1/1, 63mm pitch | PNC 922753 | ❑ |
| • Trolley with tray rack, 16 GN 1/1, 80mm pitch | PNC 922754 | ❑ |
| • Banquet trolley with rack holding 54 plates for 20 GN 1/1 oven and blast chiller freezer, 74mm pitch | PNC 922756 | ❑ |
| • Bakery/pastry trolley with rack holding 600x400mm grids for 20 GN 1/1 oven and blast chiller freezer, 80mm pitch (16 runners) | PNC 922761 | ❑ |
| • Banquet trolley with rack holding 45 plates for 20 GN 1/1 oven and blast chiller freezer, 90mm pitch | PNC 922763 | ❑ |
| • Kit compatibility for aos/easyline trolley (produced till 2019) with SkyLine/ Magistar 20 GN 1/1 combi oven | PNC 922769 | ❑ |
| • Kit compatibility for aos/easyline 20 GN oven with SkyLine/Magistar trolleys | PNC 922771 | ❑ |
| • Water inlet pressure reducer | PNC 922773 | ❑ |
| • Extension for condensation tube, 37cm | PNC 922776 | ❑ |
| • Non-stick universal pan, GN 1/ 1, H=40mm | PNC 925001 | ❑ |
| • Non-stick universal pan, GN 1/1, H=60mm | PNC 925002 | ❑ |
| • Double-face griddle, one side ribbed and one side smooth, GN 1/1 | PNC 925003 | ❑ |
| • Aluminum grill, GN 1/1 | PNC 925004 | ❑ |
| • Frying pan for 8 eggs, pancakes, hamburgers, GN 1/1 | PNC 925005 | ❑ |
| • Flat baking tray with 2 edges, GN 1/1 | PNC 925006 | ❑ |
| • Baking tray for 4 baguettes, GN 1/1 | PNC 925007 | ❑ |
| • Potato baker for 28 potatoes, GN 1/1 | PNC 925008 | ❑ |
| • Non-stick universal pan, GN 1/2, H=20mm | PNC 925009 | ❑ |
| • Non-stick universal pan, GN 1/2, H=40mm | PNC 925010 | ❑ |
| • Non-stick universal pan, GN 1/2, H=60mm | PNC 925011 | ❑ |
| • Kit of 6 non-stick universal pans, GN 1/1, H=20mm | PNC 925012 | ❑ |
| • Kit of 6 non-stick universal pans, GN 1/1, H=40mm | PNC 925013 | ❑ |
| • Kit of 6 non-stick universal pan GN 1/1, H=60mm | PNC 925014 | ❑ |



The company reserves the right to make modifications to the products without prior notice. All information correct at time of printing.

# SkyLine Premium
# Natural Gas Combi Oven 20GN1/1, boiler AISI 316L

| | |
|---|---|
| **Electric** | |
| **Supply voltage:** | 220-240 V/1 ph/50 Hz |
| **Electrical power, max:** | 1.8 kW |
| **Electrical power, default:** | 1.8 kW |
| **Gas** | |
| **Total thermal load:** | 217344 BTU (54 kW) |
| **Gas Power:** | 54 kW |
| **Standard gas delivery:** | Natural Gas G20 |
| **ISO 7/1 gas connection diameter:** | 1" MNPT |
| **Water:** | |
| **Inlet water temperature, max:** | 30 °C |
| **Inlet water pipe size (CWI1, CWI2):** | 3/4" |
| **Pressure, min-max:** | 1-6 bar |
| **Chlorides:** | <20 ppm |
| **Conductivity:** | >50 µS/cm |
| **Drain "D":** | 50mm |
| **Capacity:** | |
| **Trays type:** | 20 (GN 1/1) |
| **Max load capacity:** | 100 kg |
| **Key Information:** | |
| **Door hinges:** | Right Side |
| **External dimensions, Width:** | 911 mm |
| **External dimensions, Depth:** | 864 mm |
| **External dimensions, Height:** | 1794 mm |
| **Weight:** | 288 kg |
| **Net weight:** | 288 kg |
| **Shipping weight:** | 387 kg |
| **Shipping volume:** | 1.83 m³ |
| **ISO Certificates** | |
| **ISO Standards:** | ISO 9001; ISO 14001; ISO 45001; ISO 50001 |



The company reserves the right to make modifications to the products without prior notice. All information correct at time of printing.

# SkyLine Premium
# Natural Gas Combi Oven 20GN1/1, boiler AISI 316L

## Front

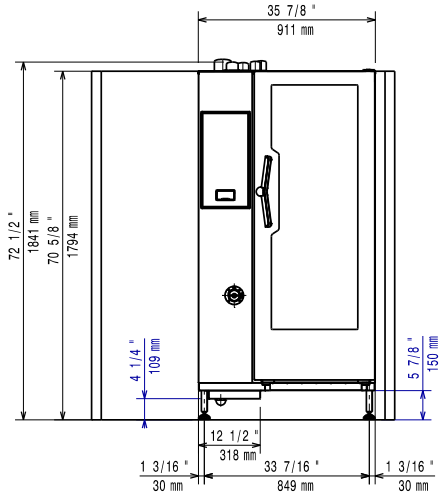


## Side

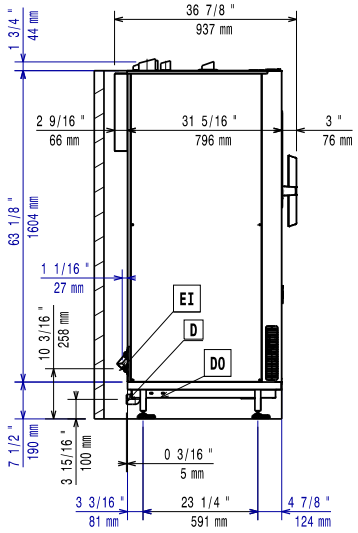


CWI1 = Cold Water inlet 1 (cleaning)
CWI2 = Cold Water Inlet 2 (steam generator)
D = Drain
DO = Overflow drain pipe
EI = Electrical inlet (power)
G = Gas connection

## Top

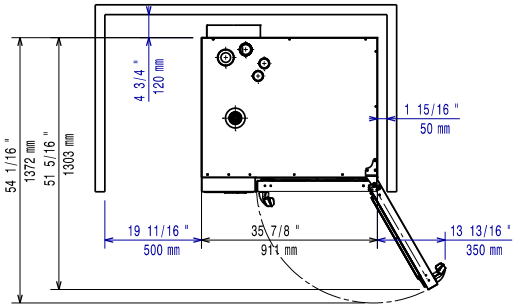


## Distances

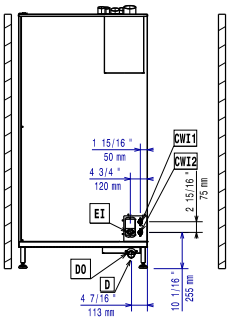


CWI1 = Cold Water inlet 1 (cleaning)
CWI2 = Cold Water Inlet 2 (steam generator)
D = Drain
DO = Overflow drain pipe
EI = Electrical inlet (power)
G = Gas connection




The company reserves the right to make modifications to the products without prior notice. All information correct at time of printing.