DOMINATOR*PLUS*

**User, installation, and servicing instructions**

# INDUCTION SOLIDTOP COUNTERTOP

E3907I

Read these instructions before use

**DATE PURCHASED:** _____

**MODEL NUMBER:** _____

**SERIAL NUMBER:** _____

**DEALER:** _____

**SERVICE PROVIDER:** _____

**T101075**

Rev No 5
Published: 09/09/2026

Dear Customer

Thank you for choosing Falcon Foodservice Equipment.

This manual can be downloaded from www.falconfoodservice.com or scan here:

**IMPORTANT:** Please keep this manual for future reference.


**Falcon Foodservice Equipment**

**HEAD OFFICE**

Wallace View, Hillfoots Road, Stirling. FK9 5PY. Scotland.


**PREVENTATIVE MAINTENANCE CONTRACT**

To obtain maximum performance from this unit regular servicing of the appliance should be undertaken to ensure correct operation, it is functioning as intended, and safe to use. We recommend servicing in accordance with SFG20 Maintenance Schedules and as a minimum, after 2,500 hours of use, or annually, whichever comes first and that a maintenance contract be arranged with an appointed service contact. Visits may then be made at agreed intervals to carry out adjustments and repairs.

**WEEE Directive Registration No. WEEE/DC0059TT/PRO**

At end of appliance life, dispose of appliance and any replacement parts in a safe manner, via a licensed waste handler. Appliances are designed to be dismantled easily and recycling of all material is encouraged whenever practicable.

# CONTENTS


**1.0 SYMBOLS ..... 1**

**2.0 SAFETY GUIDANCE ..... 2**

2.1 GENERAL SAFETY ..... 2

2.2 INSTALLATION SAFETY ..... 4

2.3 ELECTRICAL SAFETY ..... 4

2.4 FIRE SAFETY ..... 5

2.5 MAINTENANCE SAFETY ..... 6

**3.0 APPLIANCE INFORMATION ..... 8**

**4.0 OPERATION ..... 9**

4.1 COMPONENT PARTS ..... 10

4.2 CONTROLS ..... 11

4.3 USING THE APPLIANCE ..... 12

4.4 DO NOT PLACE POT OR PAN OVER DIGITAL DISPLAY ..... 13

4.5 WARNING WHEN USING MULTIPLE PANS ON THE SAME HOB ..... 13

4.6 BUZZING NOISE OR TONE WHEN IN OPERATION ..... 13

4.7 HOB COOKING ZONE ENERGY LAYOUT ..... 14

4.8 HOB SETTINGS 1-9 ..... 15

4.9 PAN DETECTION ..... 15

4.10 HIGH HEATSINK TEMPERATURE ..... 15

4.11 DIGITAL DISPLAY CODES ..... 15

4.12 HOW TO OPERATE ..... 16

4.13 USEFUL CULINARY TIPS ..... 16

4.14 CHEF INDUCTION TOP SETTINGS RECOMMENDATIONS: ..... 16

4.15 THE DO NOT'S AND THE DO'S WITH THE APPLIANCE: ..... 17

**5.0 CLEANING AND MAINTENANCE ..... 18**

5.1 CLEANING ..... 19

5.2 MAINTENANCE ..... 20

5.3 MAINTENANCE - COOLING FANS ..... 21

**6.0 SPECIFICATION ..... 22**

6.1 APPLIANCE WEIGHT TABLE: ..... 22

6.2 ELECTRICAL DATA TABLE: ..... 22

**7.0 DIMENSIONS / CONNECTION LOCATIONS ..... 23**

**8.0 TRANSPORT & INSTALLATION ..... 24**

8.1 TRANSPORT & POSITIONING ..... 25

8.2 SITING / CLEARANCES ..... 26
8.3 ELECTRIC SUPPLY & CONNECTION ..... 27
8.4 COMMISSIONING ..... 29
8.5 INSTRUCTION TO USER ..... 29
**9.0 SERVICING ..... 30**
9.1 CONTROL PANEL REMOVAL ..... 30
9.2 REAR FAN COVER REMOVAL ..... 30
9.3 FUSE REMOVAL ..... 31
9.4 CONTROL SWITCHES REMOVAL ..... 32
9.5 HOB COOLING THERMOSTAT REMOVAL ..... 32
9.6 FRONT COOLING FAN REMOVAL ..... 33
9.7 RELEASE & OPEN HOB ..... 35
9.8 LED DIGITAL DISPLAY PCB REPLACEMENT ..... 36
9.9 DISCONNECT GENERATOR POWER CABLES ..... 37
9.10 DISCONNECT COIL POWER CABLES ..... 37
9.11 MEMORY STICK REMOVAL ..... 39
9.12 GENERATOR REMOVAL ..... 40
9.13 INDUCTION HEATER COILS REMOVAL ..... 42
9.14 REAR COOLING FAN REMOVAL ..... 43
9.15 CAPICTOR REMOVAL ..... 44
9.16 CIRCUIT DIAGRAMS ..... 45
9.17 WIRING DIAGRAMS ..... 46
**10.0 ACCESSORIES ..... 50**
10.1 ENERGY OPTIMIZATION KIT (DIN 18875) ..... 50
**11.0 FAULT FINDING ..... 51**
11.1 ERROR CODES ..... 51
**12.0 SPARE PARTS ..... 56**
**13.0 SERVICE INFORMATION ..... 57**

# 1.0 SYMBOLS

WARNING

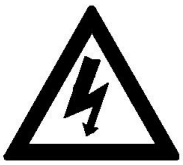

RISK OF SHOCK

RISK OF FIRE

NON-IONISING ELECTROMAGNETIC RADIATION

SCREWDRIVER

SPANNER

SOCKET

# 2.0 SAFETY GUIDANCE

## 2.1 GENERAL SAFETY

2.1.1 These instructions are only valid if the country code appears on the appliance. If the code does not appear on the appliance, refer to the technical instructions for adapting the appliance to the conditions for use in that country.

2.1.2 These appliances have been UKCA/CE-marked based on compliance with the Gas Appliance Regulations/Product Safety and Metrology Regulations, Electrical and Electromagnetic Compatibility (EMC) Regulations/Directives for the Countries, Gas Types and Pressures as stated on the data plate.

2.1.3 This equipment is for professional use only and must be used by qualified persons.

2.1.4 Never leave this appliance unsupervised when in use and always turn equipment off at the end of service.

2.1.5 The installer must instruct the responsible person(s) or user(s) of the correct operation and maintenance of the appliance.

2.1.6 Check that no damage has occurred to the appliance or supply cord during transit. If damage has occurred, do not use this appliance and report immediately to the installer or dealer.

2.1.7 If fitted to the appliance, ensure the supply cord is routed free from the appliance to avoid damage.

2.1.8 Training and Competence: To help ensure the safe use of this appliance there is a requirement for you to provide whatever information, instruction, training, and supervision as is necessary to ensure, so far as is reasonably practicable, the health and safety of all users.

2.1.9 For further help and information on training and competence we refer you to the Health & Safety Executive website; www.hse.gov.uk document ref: health and safety training INDG345. International customers should default to the health and safety guidelines provided by your government body.

2.1.10 Risk Assessment: As part of managing the health and safety of your business you must control any risks identified in your commercial kitchen. To do this you need to think about what might cause harm to people and decide whether you are taking reasonable steps to prevent that harm. This is known as risk assessment. It is important to consider the environment around the product as well as the product itself. For example, oil or food spills will present a significant risk so users so the need to immediately clean up such spills must be reflected in staff training.

2.1.11 Record the training that you provide and support it by providing safe system of work (SSOW) documents that set out procedures to be followed for potentially hazardous tasks.

2.1.12 For further help and information on risk assessments we would refer you to you the Health and Safety Executive website; www.hse.gov.uk document ref: risk assessment INDG163. International customers should default to the health and safety guidelines provided by your government body.

## 2.2 INSTALLATION SAFETY

2.2.1 Installation must meet national or local regulations. Attention must be paid to safety (installation & use) regulations, health and safety at work act, local and national building regulations, fire precautions act.

2.2.2 The installer must instruct the responsible person(s) of the correct operation and maintenance of the appliance.

2.2.3 Put a documented system in place for periodic inspections, testing and maintenance of our gas/ electrical appliances. Check that the fixed electrical installation has been inspected and tested by a competent electrical contractor (e.g., NICEIC-approved or ECA member) as prescribed in BS7671, within the last 5 years.

## 2.3 ELECTRICAL SAFETY

**WARNING: DISCONNECT THE INDUCTION GENERATORS BEFORE CARRYING OUT ANY FLASH (HIGH POT) TEST OR IR TEST ON THIS APPLIANCE**

2.3.1 To prevent shocks, this appliance must be earthed.

2.3.2 This unit is fitted with an equipotential connection at the rear on the base.

2.3.3 Before attempting any maintenance or end of service cleaning, isolate the appliance at the mains switch and take steps to ensure that it is not inadvertently switched on.

2.3.4 We recommend, Supplementary electrical protection with the use of a type B+ residual current device (RCD).

2.3.5 Fixed wiring appliances incorporate a locally situated switch disconnector.

2.3.6 to connect to, which is easily accessible for switching off and safe isolation purposes. The switch disconnector must meet the specification requirements of IEC 60947.

## 2.4 FIRE SAFETY

### OPERATOR COMPETENCY AND TRAINING

2.4.1 Ensure you are trained in the safe and proper use of the Induction Range and know how to turn it off and switch the power off at the mains.

2.4.2 Ensure you are familiar with the kitchen fire safety procedures and the location and proper use of correct fire safety equipment.

### CLEANING

2.4.3 Ensure that the appliance is regularly cleaned (either daily or as and when required dependant on usage and cooking related activities). It must be serviced and maintained by a qualified and competent service provider, and there is enough room around the appliance to do so.

2.4.4 Additionally ensure that the appliance, surrounding work area and extraction system are regularly cleaned, (at least weekly) to avoid the build-up of fats oils and grease that could present a fire risk. A deep clean should be undertaken at least every 6 months by a specialist contractor.

### ELECTRICAL ISOLATION POINTS

2.4.5 Ensure any separate electric switches provided for cooking equipment and/or extractor fans are accessible and clearly labelled.

### CARE AND MAINTENANCE OF THERMAL AND OPERATIONAL SAFETY DEVICES

2.4.6 Your oven is fitted with a thermal safety device. This will stop the heating of the oven chamber if it becomes overheated. This appliance will always fail safe so long as there is no damage to the thermal safety device.

2.4.7 Failure to clean and check the safety and operational thermostats can impact the performance of the appliance and increase the risk of an appliance fire.

2.4.8 Damage to the thermostat sensors or their capillaries can increase the risk of overheating or fire.

2.4.9 Do not operate the oven if the safety devices located within the fryer pan appear to be dislodged or damaged.

## 2.5 MAINTENANCE SAFETY

2.5.1 Unless otherwise stated, parts which have been protected by the manufacturer must not be adjusted by the installer or end user.

2.5.2 Before any cleaning is undertaken, isolate appliance from mains power supply at isolator switch.

2.5.3 Suitable protective clothing must be worn when cleaning this appliance.

2.5.4 The appliance should never be cleaned with a jet of water or steam cleaned. Do not use acid or halogen-based (e.g., chlorine) descaling liquids, flammable liquids, cleaning aids or cleaning powders.

2.5.5 Failure due to lack of proper cleaning is not covered by warranty.

2.5.6 Particular attention must be paid to cleaning the Thermostat bulb & Capillaries.

2.5.7 Take care when cleaning not to dislodge or damage the safety and operational thermostat sensors mounted on the right-hand side of the oven chamber.

2.5.8 If the thermostats or capillaries are damaged, then do not turn the appliance on and contact Falcon or you approved service provider to undertake the necessary repairs.

2.5.9 To obtain maximum performance from this unit regular servicing of the appliance should be undertaken to ensure correct operation, it is functioning as intended, and safe to use. We recommend servicing in accordance with SFG20 Maintenance Schedules and as a minimum, after 2,500 hours of use, or annually, whichever comes first and that a maintenance contract be arranged with an appointed service contact. Visits may then be made at agreed intervals to carry out adjustments and repairs.

2.5.10 During Servicing of the appliance, where applicable, please ensure seals are checked. If the integrity of the seal is compromised, it must be replaced

# IMPORTANT INFORMATION

## ELECTRICAL SAFETY AND ADVICE REGARDING SUPPLEMENTARY ELECTRICAL PROTECTION

Commercial kitchens and foodservice areas are environments where electrical appliances may be located close to liquids or operate in and around damp conditions or where restricted movement for installation and service is evident.

The installation and periodic inspection of the appliance should only be undertaken by a qualified, skilled, and competent electrician; and connected to the correct power supply suitable for the load as stipulated by the appliance data label.

The electrical installation and connections should meet the necessary requirements to the local electrical wiring regulations and any electrical safety guidelines.

**We recommend: -**

- Supplementary electrical protection with the use of a type B+ residual current device (RCD)
- Fixed wiring appliances incorporate a locally situated switch disconnector to connect to, which is easily accessible for switching off and safe isolation purposes. The switch disconnector must meet the specification requirements of IEC 60947.

**Your attention is drawn to: -**
**BS 7671:2018–Guidance Note 8 - 8.13: Other locations of increased risk.**

It is recognized that there may be locations of increased risk of electric shock other than those specifically addressed in Part 7 of BS 7671. Examples of such locations could include laundries where there are washing and drying machines in proximity and water is present, and commercial kitchens with stainless steel units, where once again, water is present.

Where because of the perception of additional risks being likely, the installation designer decides that an installation or location warrants further protective measures, the options available include:

- Automatic Disconnection of Supply (ADS) by means of a residual current device having a residual operating current not exceeding 30mA.
- Supplementary protective equipotential bonding; and
- Reduction of maximum fault clearance time.

The provision of RCDs and supplementary bonding must be specified by the host organization's appointed installation designer or electrical contractor and installed by a suitably qualified and competent electrician so as to comply with Regulations 419.2 and 544.2

# 3.0 APPLIANCE INFORMATION

**These appliances have been UKCA/CE-marked based on compliance with the Gas Appliance Regulations/Product Safety and Metrology Regulations for the Countries, Gas Types and Pressures as stated on the data plate.**

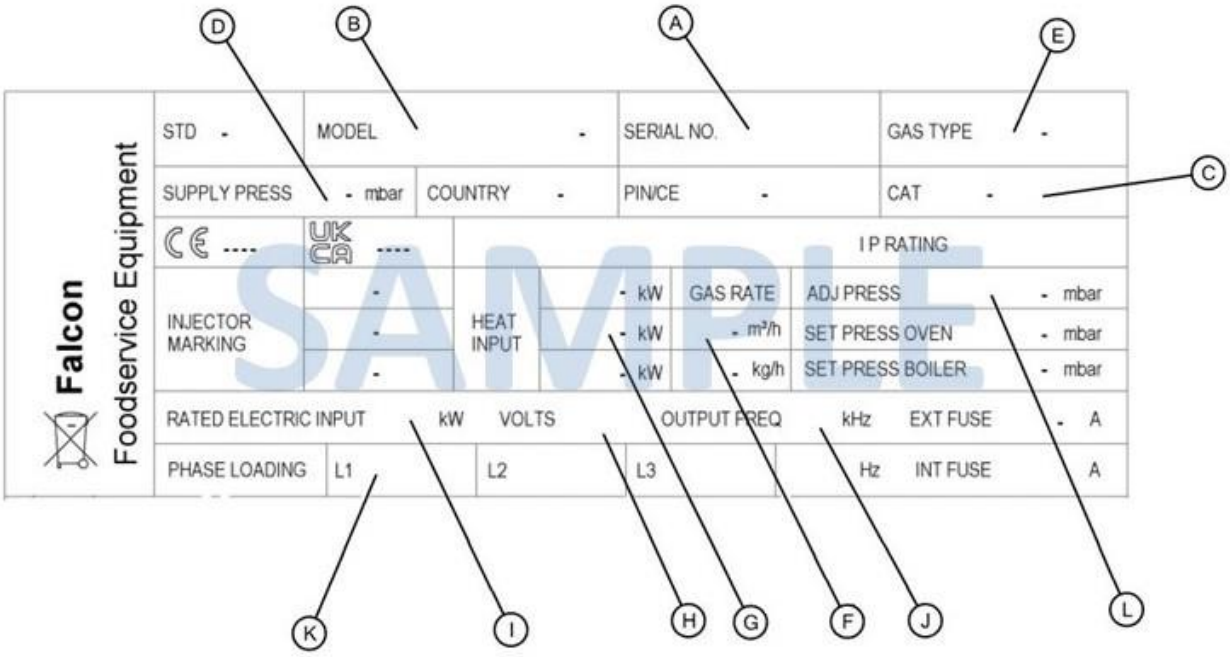


SAMPLE

**A -** Serial No

**B -** Model No

**C-** Gas Category

**D –** Supply Pressure

**E-** Gas Type

**F -** Gas Rate

**G -** Total Heat Input

**H-** Total Electrical Power

**I -** Electrical Rating

**J -** Magnetic Field Frequency

**K -** Electrical Phase Loading

**L-** Adjusted Gas Pressure

# 4.0 OPERATION

| | |
|---|---|
| | **IF GLASS-CERAMIC TOP IS CRACKED OR BROKEN IMMEDIATELY DISCONNECT APPLIANCE FROM POWER SUPPLY AND CONTACT YOUR SERVICE AGENT.**<br><br>**THE AIR INTAKE FILTERS MUST BE IN POSITION DURING OPERATION IT SHOULD BE CLEANED REGULARLY AND DO NOT OBSTRUCT AIR FILTER ENTRY BELOW.** |
| | **USERS MUST BE MADE AWARE THAT INDIVIDUALS FITTED WITH A PACEMAKER SHOULD CONSULT THEIR DOCTOR IF IN A CLOSE PROXIMITY TO THIS UNIT. THIS INDUCTION UNIT EMANATES AN 18 KHz TO 25 KHz OUTPUT THAT MAY AFFECT OLDER TYPES OF PACEMAKER.**<br><br>**USERS MUST ALSO BE AWARE THAT INDIVIDUALS FITTED WITH An INSULIN PUMP SHOULD CONSULT THEIR INSULIN PUMP MANFACTURE AND DOCTOR IF IN A CLOSE PROXIMITY TO THIS UNIT. THIS INDUCTION UNIT EMANATES AN 18 KHz TO 25 KHz OUTPUT THAT MAY AFFECT SOME TYPES OF INSULIN PUMPS.** |
| | **USE OF THE CORRECT TYPE OF PAN IS ESSENTIAL FOR CORRECT OPERATION.**<br><br>**DO NOT PLACE ANY METAL OBJECTS, SUCH AS KITCHEN UTENSILS, CUTLERY, ALUMINIUM FOIL, OR PLASTIC VESSELS, ON THE GLASS CERAMIC TOP.**<br><br>**THE USER MUST ALSO BE AWARE OF POTENTIAL TO HEAT JEWELLERY AND DISRUPT ELECTRONIC EQUIPMENT PLACED OVER THE INDUCTION ZONES MAGNETIC FIELD.**<br><br>**DO NOT PLACE CREDIT CARDS, ETC, ON THE GLASS-CERAMIC TOP AS DATA COULD BE WIPED OFF.**<br><br>**NEVER LEAVE THE INDUCTION HOB UNSUPERVISED WHEN IN USE. THE GLASS-CERAMIC TOP MUST NOT BE USED FOR STORAGE.**<br><br>**DAMAGED PANS CAN REDUCE APPLIANCE EFFICIENCY.**<br><br>**WARPED OR POOR CONDITION PANS OR POTS WILL POTENTIALLY CAUSE DAMAGE TO CERAMIC GLASS AND ZONE MARKERS.**<br><br>**DO NOT USE SIZZLER PLATES ON HOB AS IT CAN POTENTIALLY DAMAGE GLASS.** |

## 4.1 COMPONENT PARTS

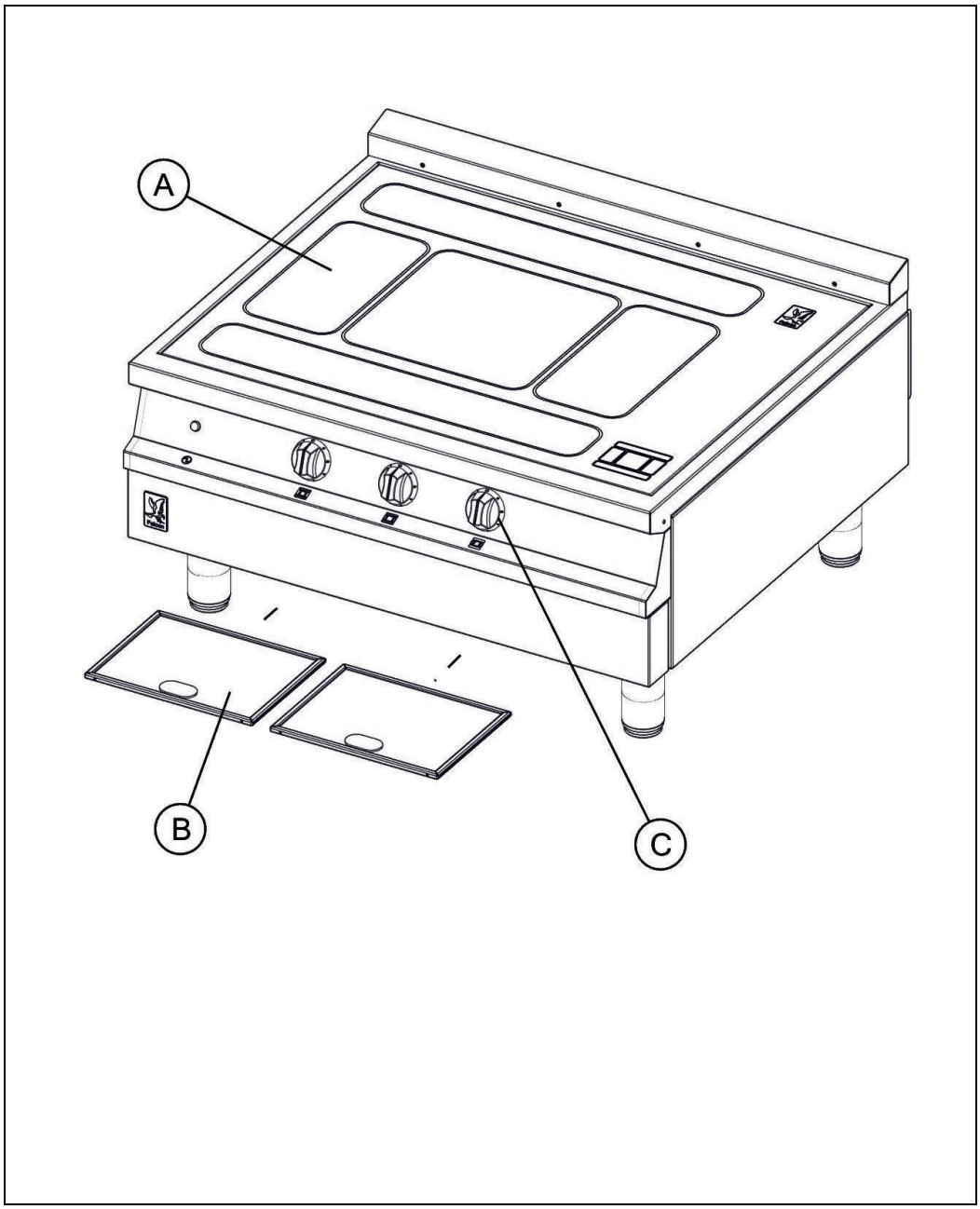


A - Glass Hob

B - Filter

C - Hob Zone Control Switch

## 4.2 CONTROLS

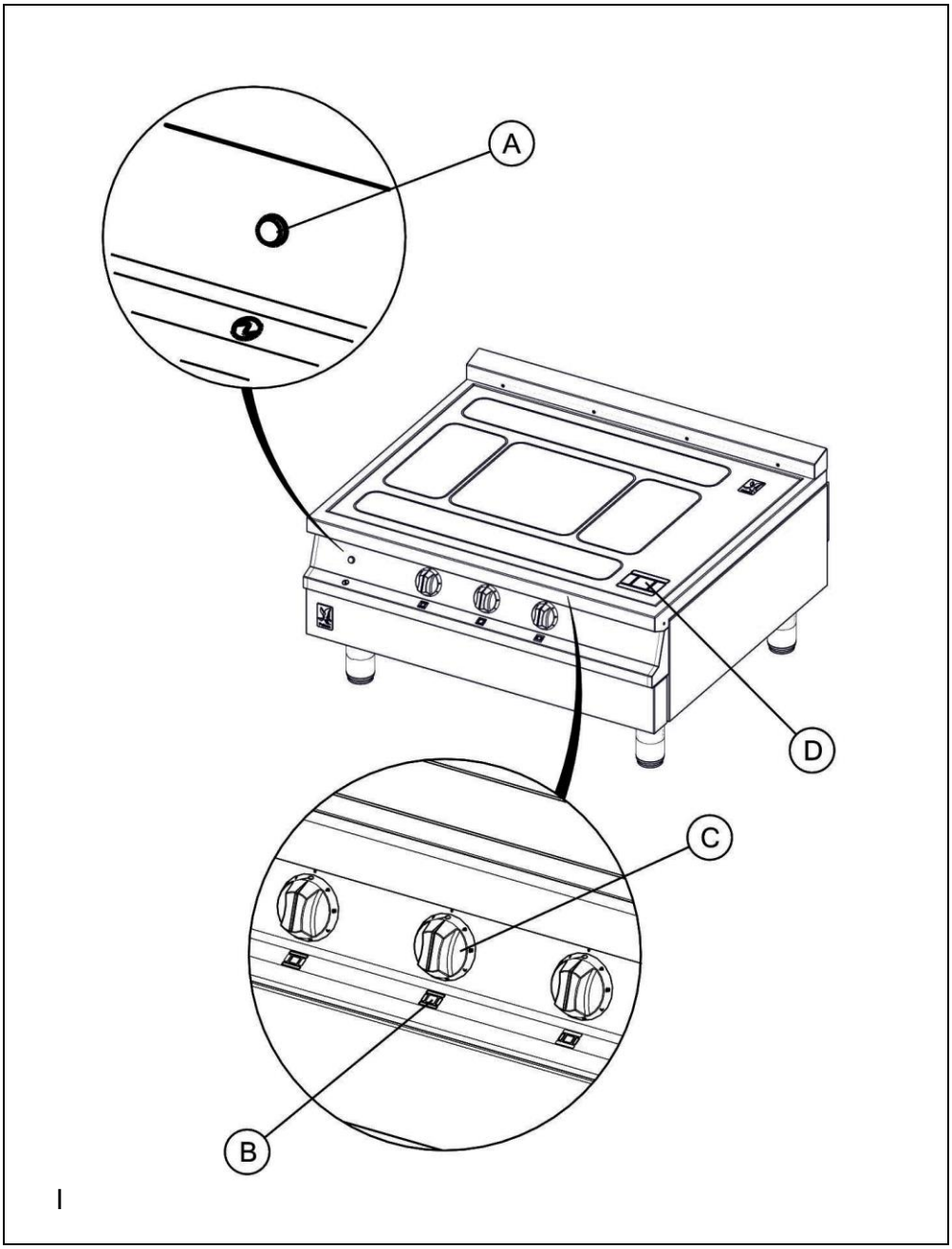


A - Power neon (red)

B - Induction zone indicator

C - Induction control switch

D - Induction zone digital display

## 4.3 USING THE APPLIANCE

4.3.1 Ensure you use the correct size of pot for each zone. Recommended pot sizes are in the images below.

Front and rear zone

<Ø120 Ø120 – Ø250

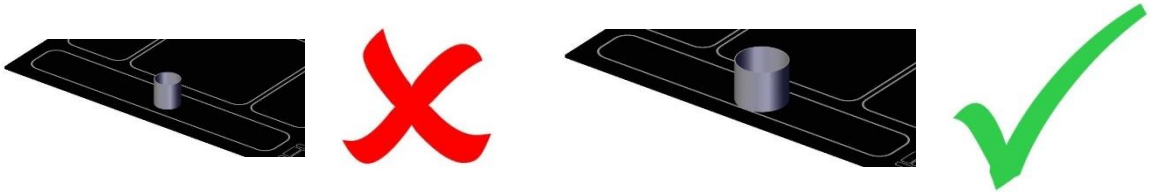

Centre zone

<Ø120 Ø120 – Ø300

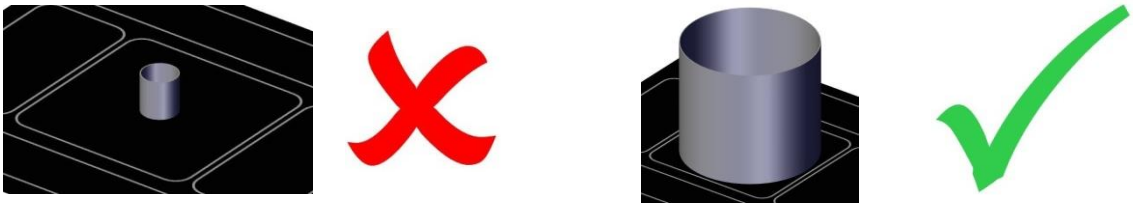

Left hand and right-hand zone.

<Ø120 Ø120 – Ø250

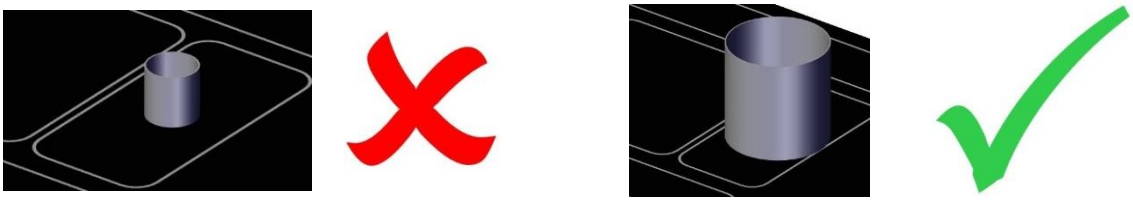

4.3.2 Ensure you use the correct type of pot.

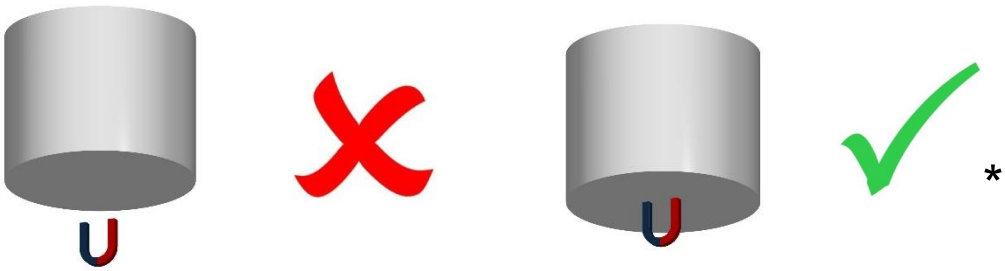

4.3.3 Ensure you use a clean flat bottom pan.

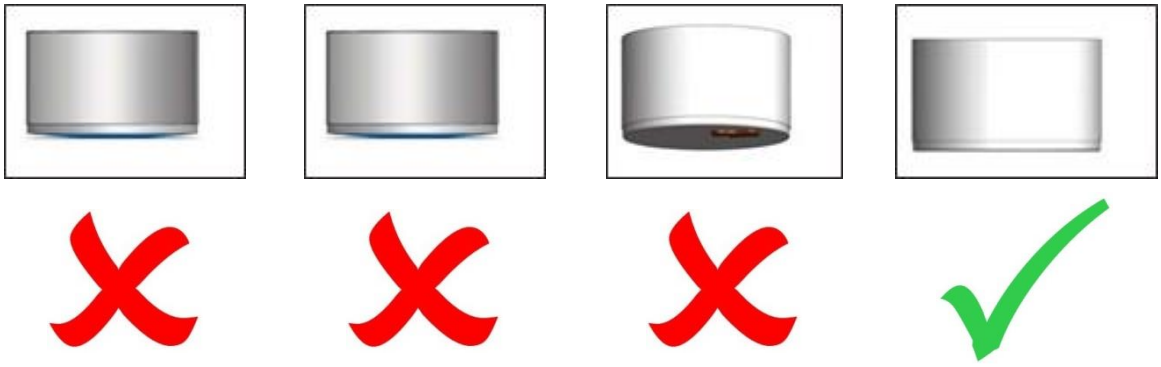

## 4.4 DO NOT PLACE POT OR PAN OVER DIGITAL DISPLAY

4.4.1 This can result on digital display overheating.

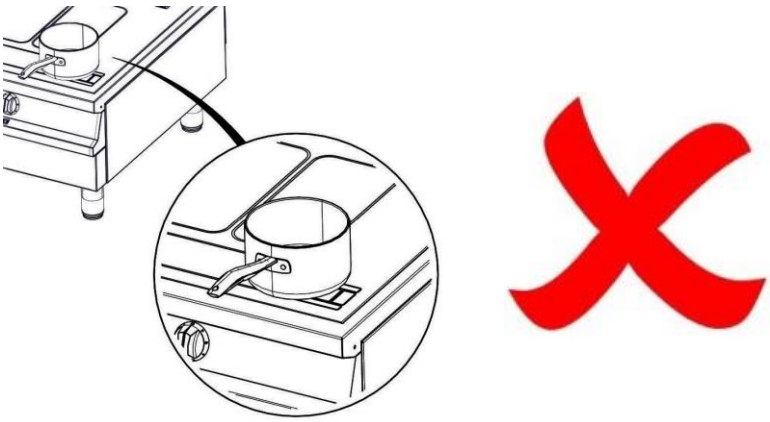

## 4.5 WARNING WHEN USING MULTIPLE PANS ON THE SAME HOB

4.5.1 Do not allow pans to touch each whilst in use. Pans contacting each can result stray electrical flows:

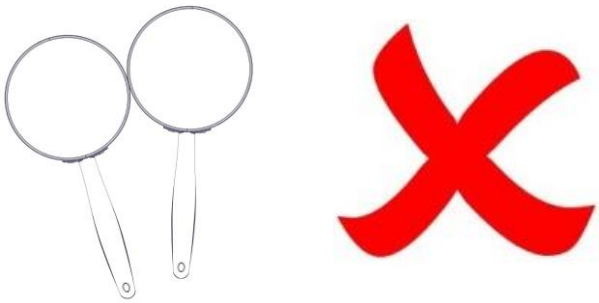

## 4.6 BUZZING NOISE OR TONE WHEN IN OPERATION

When using large empty pans that straddle multiple zones, you may experience a buzzing noise/tone coming from the hob. This noise can be worse when using high power settings. To reduce the noise, lower the power setting.

## 4.7 HOB COOKING ZONE ENERGY LAYOUT

Each zone has a different maximum power availability. See below diagram of layout:

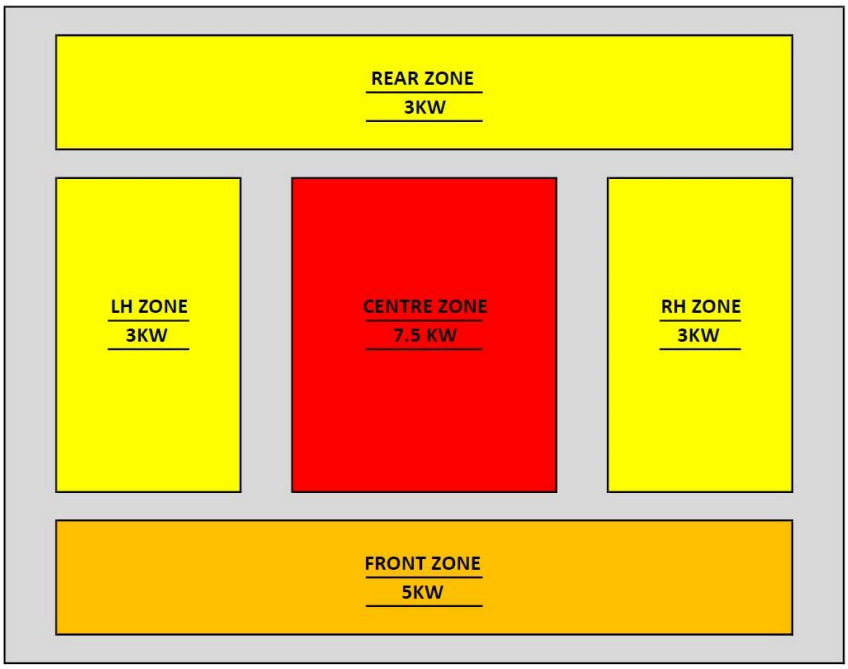


For example: When boiling we recommend using the centre zone and once boiled move pot to rear or side zone to maintain a simmer.

## 4.8 HOB SETTINGS 1-9

4.8.1 Each cooking zone is controlled by a marked, variable control from 1 (lowest) to 9 (highest).

## 4.9 PAN DETECTION

4.9.1 This prevents the zones being turned on without a pan being present. It also switches the zone off as soon as a pan is removed.

Also, if the pan is made from the wrong type of material for induction equipment the digital display will read the no pan present symbol on the glass.

## 4.10 HIGH HEATSINK TEMPERATURE

4.10.1 Occurs when the temperature of the heatsink in the generator goes above 75°C. An ‘F’ symbol will be displayed and the power output from the device will be limited. This can be caused by insufficient airflow to the generators. Do not switch off the appliance and allow cooling to occur. When the ‘F’ symbol disappears either continue operation or switch off the appliance. If problem, persist remove and clean air-filters as per section 5.1.

## 4.11 DIGITAL DISPLAY CODES

| | |
|---|---|
| 9 | Power level settings (1-9) |
| P | Protection of restart after disruption of current |
| F | High heat sink temperature |
| U | Phase failure |
| ● | Reduction of performance |
| U | Pan detection (no pan present). |
| E | Error codes for generator. |

## 4.12 HOW TO OPERATE

4.12.1 To adjust settings, turn the control switch clockwise and select your preference incrementally.

Note: As per solid top the centre zone or “bullseye” has the strongest output. Moving towards the sides, rear and front the output decreases. These zones do not deliver the same power output as the centre. See section 4.7 for diagram of hob energy layout for reference.

4.12.2 Refer to the display screen and control dials for preferred settings and performance.

4.12.3 Multiple pans can be used across all zones. Refer to sections 4.3, 4.4 and 4.5 for further important guidance.

## 4.13 USEFUL CULINARY TIPS

- For best performance output, use the appropriate size of pot or pan referenced to each zone.
- The more populated a zone is, the more energy will be allocated to that zone.
- Examples 1: a large pot is more efficient on the central zone than a small pot.
- Examples 2: multiple small pots or pans on the central zone will draw more energy.
- Examples 3: small single pots of pans on front, rear and side zones will draw less energy with lighter performance output.
- Populating with additional pots or pans will improve performance.
- Preset the control dials to match your current requirements.
- For cleaning the hob, best practice is to use a luke warm dampened microfibre towel with little sink dishwash detergent.

## 4.14 CHEF INDUCTION TOP SETTINGS RECOMMENDATIONS:

| Process | Central Zone Setting | Left Right Zone setting | Front Rear Zone setting |
|---|---|---|---|
| Bulk Food Preparation | 8 | 6 | 7 |
| A la carte service | 7 | 9 | 8 |
| Set menu | 8 | 8 | 9 |
| Basic menu prep | 7 | 7 | 6 |
| Light menu prep | 6 | 6 | 5 |
| Rapid boil | 8 | - | - |
| Robust strong boil (not continuous) | 9 | - | - |
| Soft boil / strong simmer | 7 | 7 – 9 | 7 - 9 |
| Simmer | 4 – 5 | 5 – 7 | 5 – 7 |
| Poaching | 5 | 6 | 6 |

## 4.15 THE DO NOT'S AND THE DO'S WITH THE APPLIANCE:

- Never leave any commercial equipment unattended, whilst operational.
- Take care not to excessively overheat pans and pots beyond 1st smoking point.
- Especially take care with dry pans and pots.
- When sauteing or flash frying, take care with the pan tossing movement and action to avoid glass damage or dropping onto the glass surface.
- It is recommended to lift pans or pots opposed to pushing, pulling, and dragging across the glass.
- Always check your pots and pans for damage, and that the bases are flat, not warped, and free from debris.
- Avoid lifting heavy pots or pans, ask for help.
- When lifting, ensure you have firm grip on handles to avoid accidental dropping.
- Always remove spillages or food debris at the earliest opportunity.
- Never clean the glass hob with strong chemicals, abrasive materials or liquids, acids, or strong detergents.

**DAMAGING THE GLASS:**
**DO NOT DRAG HEAVY POTS ACROSS THE GLASS SURFACE.**
**WHEN MOVING LIFT INSTEAD.**

**TAKE CARE NOT TO DROP HEAVY ITEMS ON TO GLASS**

# 5.0 CLEANING AND MAINTENANCE

When removing heavy items to aid cleaning or maintenance particular care should be taken. A manual handling risk assessment is the best way to determine the level of risk to anyone using or maintaining this equipment. To help with such an evaluation we have included the weights of individual components that may present significant risk.

For further help and information on manual handling and associated risk assessment we would refer you to you the Health and Safety Executive website; www.hse.gov.uk document ref: manual handling at work INDG143. International customers should default to the health and safety guidelines provided by your government body.

The cleaning of fryers or other products that use hot oil present significant risks to end users and particular care should be taken. Cold water and hot oil for example are an explosive mix and should be avoided at all costs.

Other useful references for health and safety issues

- www.hse.gov.uk
- Essentials of health and safety at work ISBN978
- Noise at work INDG362
- Safe systems of work
- Other notes added to the body of the instructions.

**BEFORE ANY CLEANING IS UNDERTAKEN, ISOLATE THE APPLIANCE FROM MAINS POWER SUPPLY AT ISOLATOR SWITCH.**

**SUITABLE PROTECTIVE CLOTHING MUST BE WORN WHEN CLEANING THIS APPLIANCE.**

**THE APPLIANCE MUST NOT BE STEAM CLEANED. DO NOT USE ACID OR HALOGEN-BASED (E.G. CHLORINE) DESCALING LIQUIDS, FLAMMABLE LIQUIDS, CLEANING AIDS OR CLEANING POWDERS.**

**FAILURE DUE TO LACK OF PROPER CLEANING IS NOT COVERED BY WARRANTY.**

**NOTE:** All surfaces are easier to clean if spillages are removed before becoming burnt on, and the appliance is cleaned daily.

It should be noted that certain scouring pads including nylon types can easily mark stainless steel. Care should be exercised during the cleaning process. When rubbing stainless steel with a cloth, always rub in the direction of the grain.

## 5.1 CLEANING

5.1.1 Switch off appliance and allow appliance to cool down.

**CLEAN THE AIR INTAKE FILTERS REGULARLY. FAILURE TO CLEAN THE FILTER REGULARLY MAY CAUSE PROBLEMS THAT WILL NOT BE COVERED BY WARRANTY. FOR GUIDANCE WOULD RECOMMEND WEEKLY CLEANING INCLUDING DAILY INSPECTION TO DETERMINAL THE STATE OF THE FILTERS. THE AIR INTAKE FILTER MUST BE IN PLACE DURING OPERATION.**

**DO NOT ATTEMPT TO REPAIR OR REPLACE ANY PART OTHER THAN THE AIR INTAKE FILTER. REFER TO THE ERROR CODE LIST TO DEBUG THE PROBLEM.**

5.1.2 The air filters are located on the underside of the countertop. It can be removed by sliding from the guides.

5.1.3 Clean using hot soapy water.

5.1.4 Before returning the filters back into position ensure the filters are completely dry.

Note: Periodic cleaning can also be done by using a soft brush & gently brushing the filter to remove any dust and debris that has collected on the filter.

5.1.5 Clean the Ceran-glass hob with hot soapy water and a soft cloth. DO NOT USE metal scrapers.

**AVOID INTENSE CLEANING OVEN HOB ZONE MARKERS.**

## 5.2 MAINTENANCE

**MAINTENANCE CHECK**

**REGULAR SERVICING OF THE APPLIANCE SHOULD BE UNDERTAKEN TO ENSURE CORRECT OPERATION, IT IS FUNCTIONING AS INTENDED, AND SAFE TO USE. WE RECOMMEND SERVICING AFTER 2,500 HOURS OF USE, OR ANNUALLY, WHICHEVER COMES FIRST.**

**ANY MAINTENANCE SCHEDULE SHOULD BE CARRIED OUT IN ACCORDANCE WITH SFG20 MAINTENANCE SCHEDULE. SHOULD ANY ISSUES WITH THE INTEGRITY OF THE COMPONENTS BE IDENTIFIED THESE SHOULD BE REPLACED. IF THE APPLIANCE IS NOT CONSIDERED SAFE THE UNIT SHOULD BE REMOVED FROM SERVICE AND THE RESPONSIBLE PERSON ADVISED WHY THE UNIT IS NOT SAFE TO USE AND WHAT REMEDIAL ACTION IS NEEDED. CONTENTS OF THE MAINTENANCE SCHEDULE SHOULD BE AGREED WITH THE MAINTENANCE PROVIDER.**

## 5.3 MAINTENANCE - COOLING FANS

5.3.1 The recommended maintenance schedule for the hob cooling fans is:

| Part to check | Type of inspection | Frequency |
|---|---|---|
| Protection against accidental contact with fan | Visual | Min ½ yearly |
| Check fan for damage | Visual | Min ½ yearly |
| Fan fixed in place correctly | Visual | Min ½ yearly |
| Fan wires fixed in place | Visual | Min ½ yearly |
| Fan is earthed correctly | Visual | Min ½ yearly |
| Insulation of wires | Visual | Min ½ yearly |
| Check impeller for wear/sediment/corrosion | Visual | Min ½ yearly |

# 6.0 SPECIFICATION

## 6.1 APPLIANCE WEIGHT TABLE:

| APPLIANCE | UNIT WEIGHT (kg) | PACKED WEIGHT (kg) |
|---|---|---|
| E3907I | 95 | 113 |

## 6.2 ELECTRICAL DATA TABLE:

The figures in the table below ate based on the maximum theoretical power draw if all zones were covered by pots capable of drawing maximum power.

| | |
|---|---|
| **Power** | 21.5kW |
| **Supply voltage** | 400VAC 3ph N |
| **Current per phase** | 32A |
| **Frequency** | 50/60Hz |

**IF ANY CURRENT IS OUT WITH THESE TOLERANCES, THE CAUSE MUST BE INVESTIGATED AND RECTIFIED.**

# 7.0 DIMENSIONS / CONNECTION LOCATIONS

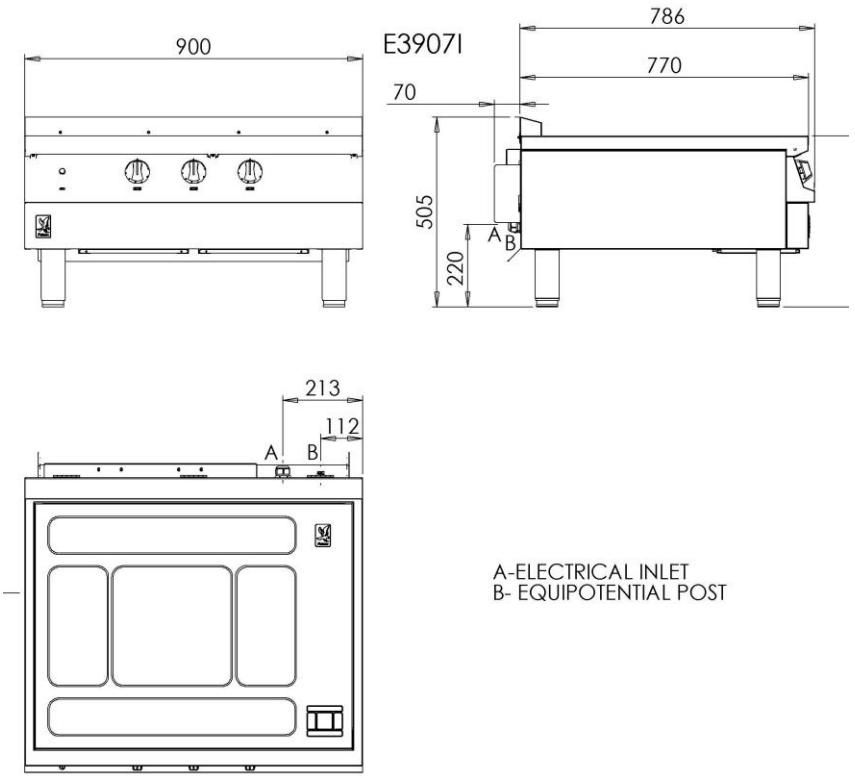


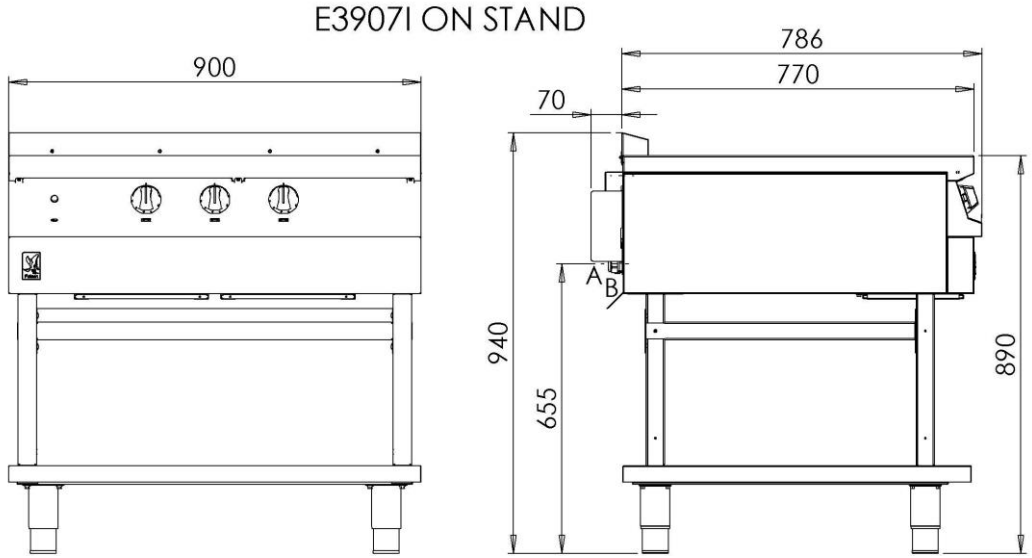

# 8.0 TRANSPORT & INSTALLATION

## ELECTRICAL SAFETY AND ADVICE REGARDING SUPPLEMENTARY ELECTRICAL PROTECTION

Commercial kitchens and foodservice areas are environments where electrical appliances may be located close to liquids or operate in and around damp conditions or where restricted movement for installation and service is evident.

The installation and periodic inspection of the appliance should only be undertaken by a qualified, skilled, and competent electrician; and connected to the correct power supply suitable for the load as stipulated by the appliance data label.

The electrical installation and connections should meet the necessary requirements to the local electrical wiring regulations and any electrical safety guidelines.

**We recommend: -**

- **Supplementary electrical protection with the use of a residual current device (RCD). If fitting an RCD, ensure it is a type B+ RCD with a minimum residual operating current of 30mA.**
- **Fixed wiring appliances incorporate a locally situated switch disconnector to connect, which is easily accessible for switching off and safe isolation purposes. The switch disconnector must meet the specification requirements of IEC 60947.**

**Your attention is drawn to: -**
**BS 7671:2018–Guidance Note 8 - 8.13: Other locations of increased risk.**

It is recognized that there may be locations of increased risk of electric shock other than those specifically addressed in Part 7 of BS 7671. Examples of such locations could include laundries where there are washing and drying machines in proximity and water is present, and commercial kitchens with stainless steel units, where once again, water is present.

Where because of the perception of additional risks being likely, the installation designer decides that an installation or location warrants further protective measures, the options available include:

- Automatic Disconnection of Supply (ADS) by means of a residual current device having a residual operating current not exceeding 30mA;
- Supplementary protective equipotential bonding; and
- Reduction of maximum fault clearance time.

The provision of RCDs and supplementary bonding must be specified by the host organization’s appointed installation designer or electrical contractor and installed by a suitably qualified and competent electrician to comply with Regulations 419.2 and 544.2

## 8.1 TRANSPORT & POSITIONING

**GENERAL WARNINGS FOR TRANSPORT:**

8.1.1 Observe the Maximum load and stacking limits.

8.1.2 Follow the indications shown on the packaging, any instructions on the equipment, including those on the points where forklift trucks cannot be used.

8.1.3 Danger of crushing during transportation due to the weight of the appliance.

8.1.4 Hands and fingers may be crushed.

8.1.5 Wear suitable protective clothing when transporting.

8.1.6 Danger of overturning during transporting.

8.1.7 Danger of crushing due to the appliance overturning on persons.

8.1.8 Take care of the centre of gravity of the appliance.

8.1.9 Take great care to ensure that the appliance does not overturn during transportation, lifting, and after installation.

Take care of the width and height of accesses during transportation.

Take care not to damage the appliance due to narrow doorways: doorways less than 80cm wide, remove any handles etc.

Check that all the parts of the appliance are intact and have not been damaged during transportation. If damaged due to transportation, inform the specialised reseller/ haulier immediately.

To position the appliance, it is recommended to use the mount offered by the manufacturer, should you want to do things differently, it is necessary to take account of the weight of the appliance.

Before permanently fixing the appliance in position, the Water, Electrical and Gas Connections must be made. (See relative sections).

Once the appliance is installed, the electrical power cable must be protected, and never stretched or tugged.

Remove all packaging materials and peel away the protective plastic film from all external surfaces of the appliance.

**UNLESS OTHERWISE STATED, PARTS WHICH HAVE BEEN PROTECTED BY THE MANUFACTURER ARE NOT TO BE ADJUSTED BY THE INSTALLER.**

Please ensure that any plastic coatings are removed prior to use. Before operation, the appliance should be thoroughly cleaned and dried.

Discolouration of heated parts is caused by factory testing to ensure a satisfactory unit. It does not affect quality or performance.

## 8.2 SITING / CLEARANCES

**THIS APPLIANCE CAN BE SITED AGAINST A COMBUSTABLE WALL.**

8.2.1 Position the appliance and level using feet or castors adjusters as shown below.

8.2.2 To adjust height of unit with feet twist lower half of feet as necessary.

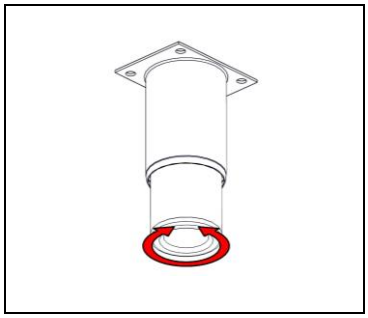

8.2.3 When on stand to adjust height of unit with feet twist lower half of feet as necessary.

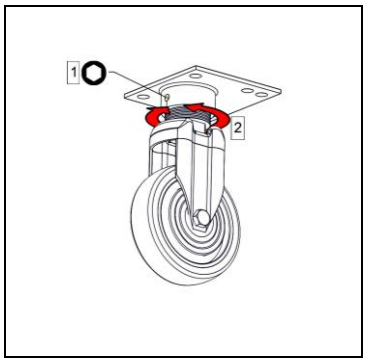


8.2.4 To adjust height of castor, loosen grub screw and twist body of castor as necessary.

Once height set to required position tighten grub screw to secure.

**TAKE CARE WHEN MOVING AN APPLIANCE FITTED WITH CASTORS.**

## 8.3 ELECTRIC SUPPLY & CONNECTION

The location of the electrical connection is as seen in section 5. this unit is suitable for AC supplies only.

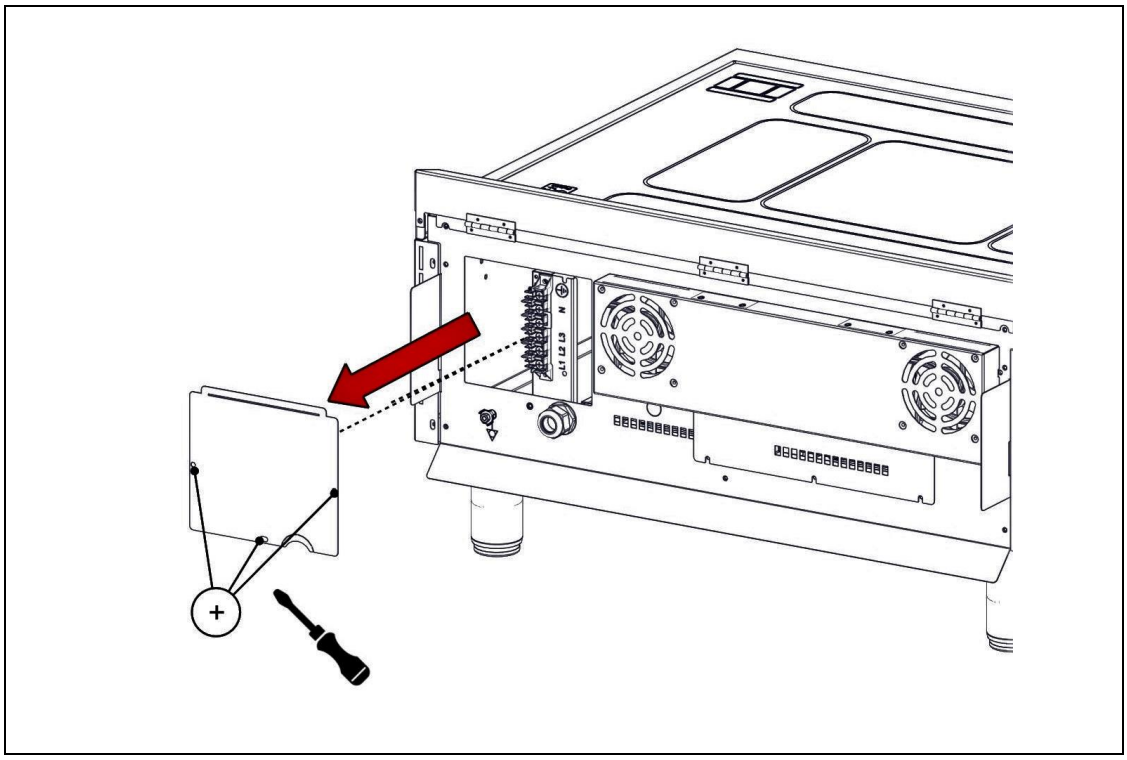

To install the mains cable, remove terminal cover and feed the cable through the cable gland and connect the mains supply to the terminal block.

**WARNING: DISCONNECT THE INDUCTION GENERATORS BEFORE CARRYING OUT ANY FLASH (HIGH POT) TEST OR IR TEST ON THIS APPLIANCE**

**WARNING: UNIT IS FITTED WITH A CAPACITOR**

**BEFORE REMOVING ANY LINKS FROM THE MAINS TERMINAL OR DISCONNECTING THE MAINS LEADS, ENSURE THE CAPACITOR IS DISCHARGED OF ANY STORED VOLTAGE.**

**THIS CAN BE ACHIVED BY BRIDGING THE LIVE TERMINALS OF THE MAINS CONNECTOR WITH THE EARTH LEAD THAY SHALL BE CONNECTED TO THE APPLIANCE.**

A suitable supply cord is supplied that conforms to BSEN 50525-2-51, cable type JZ-500 HMH-C. This appliance is designed to, and must, be connected to suitably rated isolator. A suitable rated isolating switch with contact separation of at least 3mm in all poles must be installed and wiring executed in accordance with relevant regulations.

On this model. The standard terminal arrangement is Three phase (400V 3N~).
Install an appropriate three phase mains supply cable with a 32amp plug.

| | |
|---|---|
| Live 1 (Phase 1) | Brown |
| Live 2 (Phase 2) | Black |
| Live 3 (Phase 3) | Grey |
| Neutral | Blue |
| Earth | Yellow/Green |
| Screen | Silver |

**SCREEN FOR MAINS CABLE MUST BE CONNECTED TO EARTH AT THE SUPPLY AND THE TERMINAL STRIP WITHIN THE APPLIANCE.**

**THIS APPLIANCE MUST BE EARTHED**

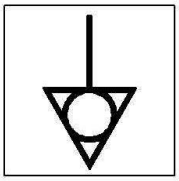

This appliance is also provided with a terminal for connection of an external equipotential conductor. This terminal is an effective electrical contact with all fixed exposed metal parts of the appliance and shall allow the connection of conductor having a nominal cross-section area of up to 10mm². It is located at the rear of the unit and identified by the following label and must only be used for bonding purposes.

## 8.4 COMMISSIONING

Refer to section 4.0 for operation.

Carry out the following operation:

8.4.1 Turn on mains power supply on.

8.4.2 Ensure red neon(s) illuminates,

8.4.3 Ensure LED on Hob Illuminates and begins to flash.

8.4.4 Switch controls to “0”

8.4.5 Place a pan suitable for induction cooker tops, filled with water, upon a cooking zone. The pan minimum diameter cannot be less than 120mm.

8.4.6 Switch all cooking zones on to position 8.

6.4.1 Check that the LEDS on the hob go solid and corresponding digital display on hob illuminates and remains lit. This indicates that “Pan detection” feature is working.

8.4.7 Repeat on all different cooking zones.

8.4.8 Leave pots to heat up until water boils and switch controls down to maintain simmer.

8.4.9 Switch controls off.

## 8.5 INSTRUCTION TO USER

8.5.1 After installation and commissioning have been completed, please hand the user instructions to the user, and provide the required training to ensure that the person/s responsible understands the instructions regarding the correct operation and cleaning of the appliance.

**PLEASE FILL OUT THE INFORMATION TABLE ON THE FRONT COVER AFTER COMMISSIONING**

If the appliance does not operate correctly, please refer to section 11.0 and rectify the problem.

# 9.0 SERVICING

## 9.1 CONTROL PANEL REMOVAL

**BEFORE ATTEMPTING ANY MAINTENANCE, ISOLATE THE APPLIANCE AT THE MAINS SWITCH AND TAKE STEPS TO ENSURE THAT IT IS NOT INADVERTENTLY SWITCHED ON.**

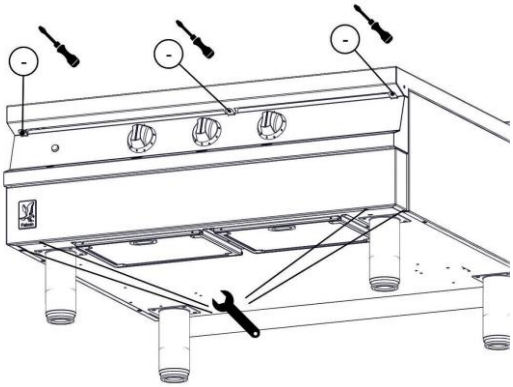

9.1.1

9.1.1 Remove fixings at top control panel and lower control panel.

9.1.2 When replacing panel, take care not to trap any connecting wires. Replace shake proof washers below fixings.

## 9.2 REAR FAN COVER REMOVAL

**BEFORE ATTEMPTING ANY MAINTENANCE, ISOLATE THE APPLIANCE AT THE MAINS SWITCH AND TAKE STEPS TO ENSURE THAT IT IS NOT INADVERTENTLY SWITCHED ON.**

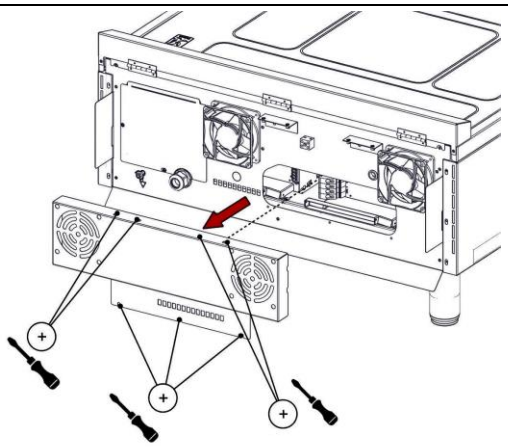

9.2.1

9.2.1 To remove undo screws on the rear fan cover to release panel.

## 9.3 FUSE REMOVAL

9.3.1 Remove control panel as detailed in section 9.1.

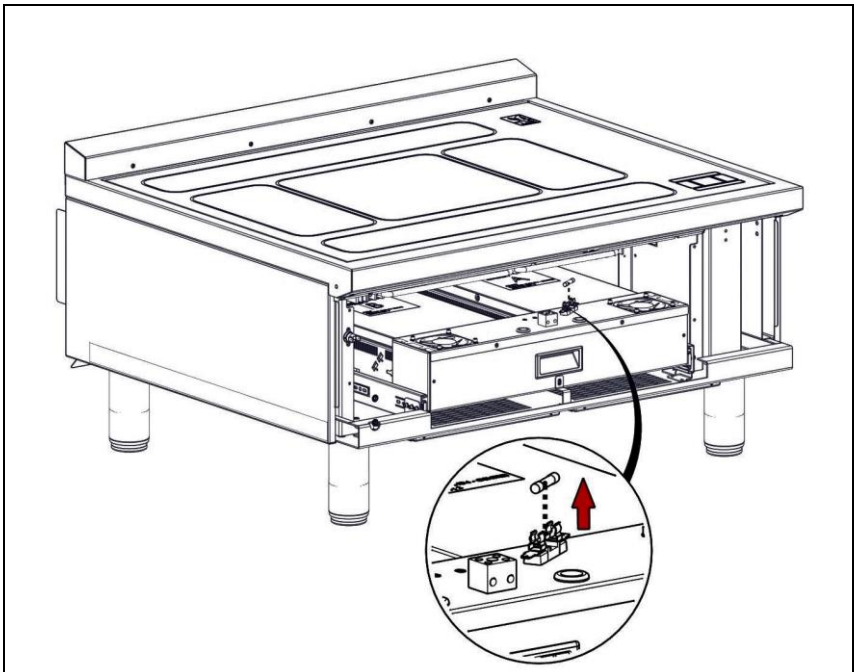

9.3.2

9.3.2 Remove fuse

## 9.4 CONTROL SWITCHES REMOVAL

9.4.1 Remove control panel as detailed in Section 9.1.

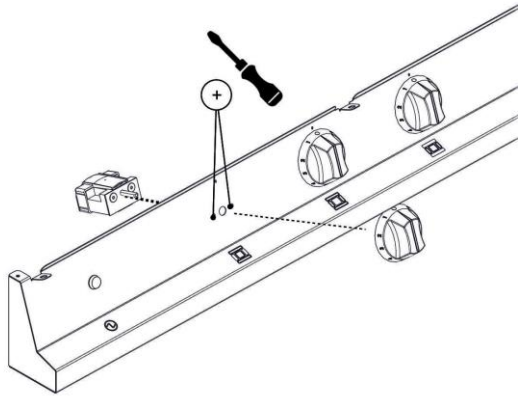

9.4.2

9.4.2 Remove switch connections and note wire arrangement. Pull off control knob. Undo fixings to release switch.

9.4.3 Fit replacement switch, ensuring that shake proof washers are fitted below the fixings.

## 9.5 HOB COOLING THERMOSTAT REMOVAL

9.5.1 The hob chamber temperature is controlled with a thermostat, the thermostat is self-resetting. It is located on the front left hand coil support.

9.5.2 Remove control panel as detailed in section 9.1.

9.5.3 Disconnect leads from thermostat.

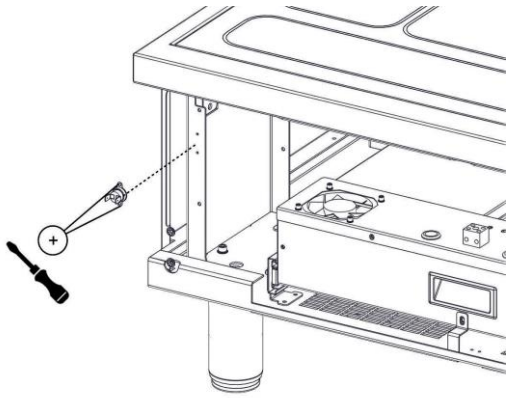

9.5.4

9.5.4 To remove undo two screws on the flanged collar and release.

9.5.5 When re-fitting ensures all electrical connections to be restored as detailed in wiring diagram.

## 9.6 FRONT COOLING FAN REMOVAL

9.6.1 Remove control panel as detailed in section in 9.1.

9.6.2 Disconnect generator power cables as detailed in section 9.8.

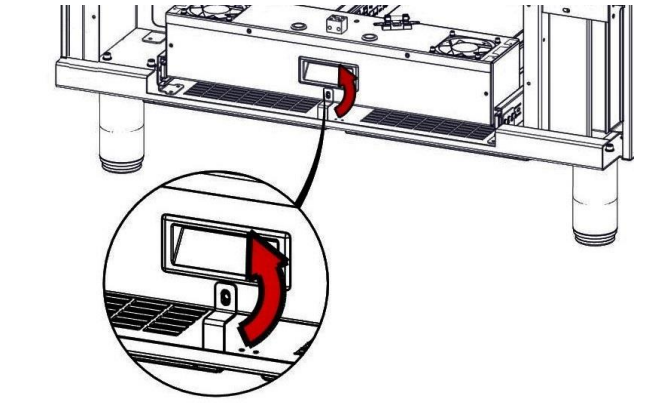

9.6.3

9.6.3 Rotate catch on generator tray to enable tray to slide out.

9.6.4 Gently slide out generator tray ensuring not to snag any cabling within the unit.

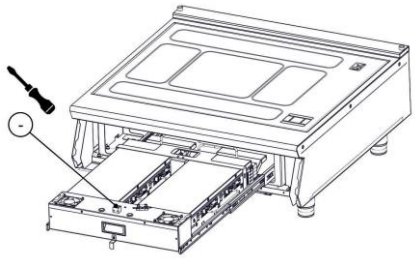

9.6.5

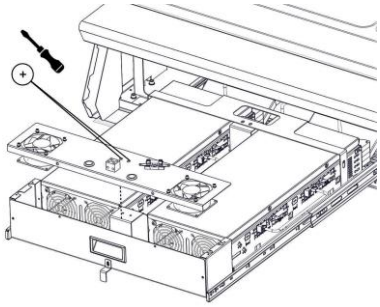

9.6.6

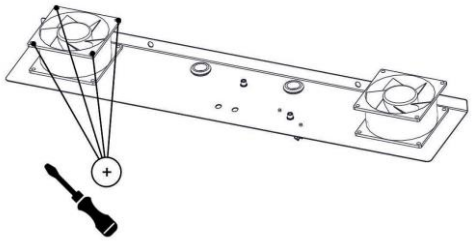

9.6.7

9.6.5 Disconnect relevant fan leads from terminal block.

9.6.6 Undo four screws on fan tray to release to tray.

9.6.7 Rotate tray and undo screws on relevant fan.

9.6.8 When re-fitting ensures all electrical connections are restored as detailed in wiring diagram.

9.6.9 When re-fitting ensures all electrical connections are restored as detailed in wiring diagram.

**Note:** Two fans at front of appliance induce cold air from outside of the appliance.

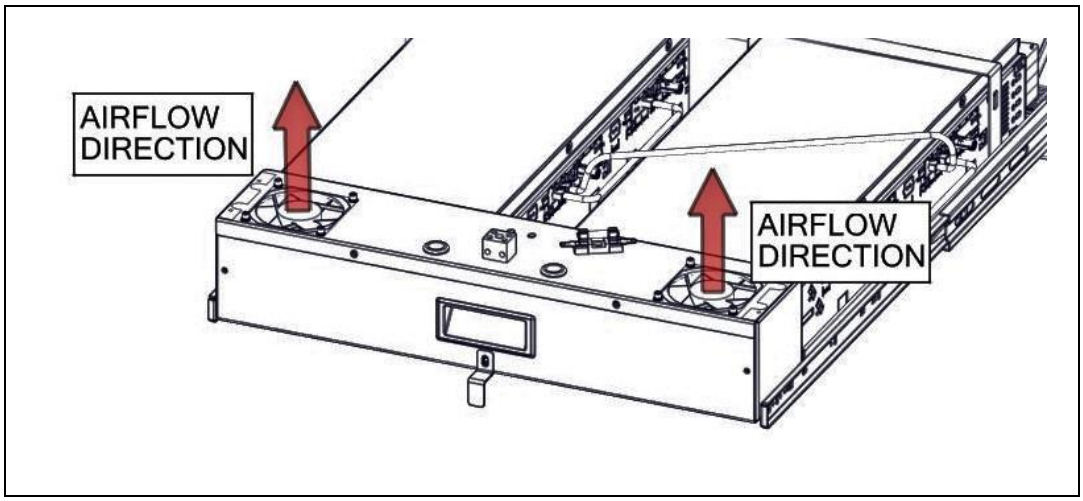

## 9.7 RELEASE & OPEN HOB

**BEFORE ATTEMPTING ANY MAINTENANCE, ISOLATE THE APPLIANCE AT THE MAINS SWITCH AND TAKE STEPS TO ENSURE THAT IT IS NOT INADVERTENTLY SWITCHED ON.**

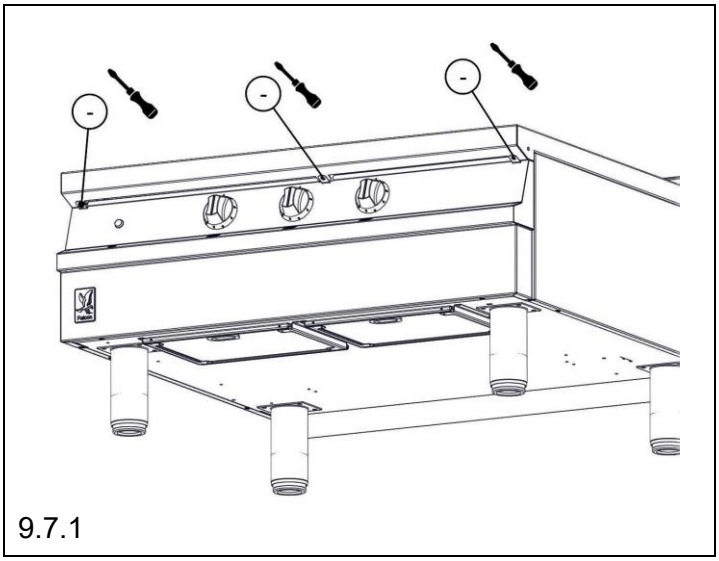

9.7.1

9.7.1 Remove fixings at top control panel.

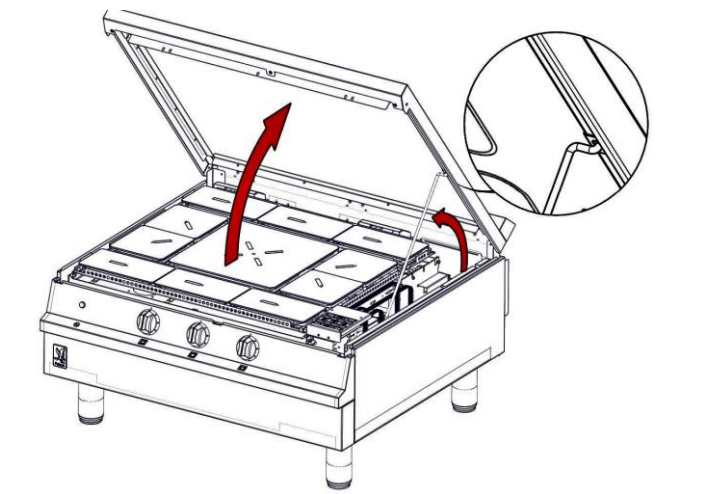

9.7.2

9.7.2 Tilt hob up and lift hob stay into position. Insert cranked end into slot on underside of hob.as shown above. Ensure stay is secure before work is carried out.

## 9.8 LED DIGITAL DISPLAY PCB REPLACEMENT

9.8.1 Open Hob as detailed in section 9.7

9.8.2 Un-do two screws on LED circuit board guard.

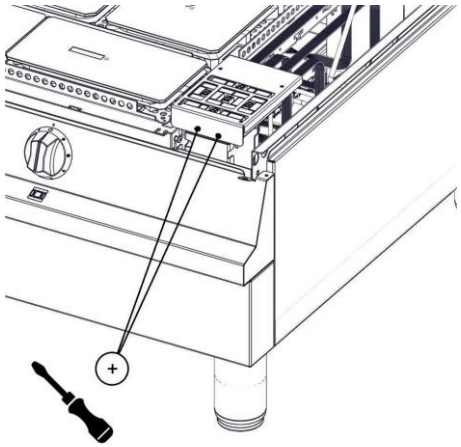

9.8.2

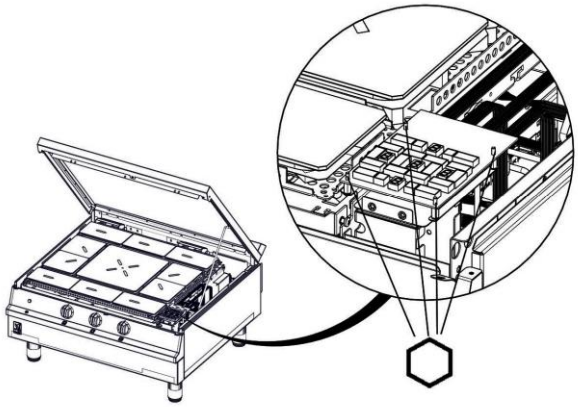

9.8.3

**LED PCB BOARD IS SUPPLIED IN A ESD BAG. WHEN REPLACING ENGINEER SHOULD TOUCH THE HOB SURFACE TO DISCHARGE HINSELF BEFORE REMOVING REPLACEMENT BOARD FROM BAG.**

9.8.3 Using a 5.5mm Socket un-do four plastic nuts on LED circuit board.

9.8.4 Un-plug all display cables from rear of board.

9.8.5 When re-fitting ensures all cable connections are restored as detailed in the wiring diagram.

## 9.9 DISCONNECT GENERATOR POWER CABLES

**BEFORE ATTEMPTING ANY MAINTENANCE, ISOLATE THE APPLIANCE AT THE MAINS SWITCH AND TAKE STEPS TO ENSURE THAT IT IS NOT INADVERTENTLY SWITCHED ON.**

9.9.1 Remove rear fan cover as detailed in section 9.2.

9.9.2 Disconnect generator power leads from both generators.

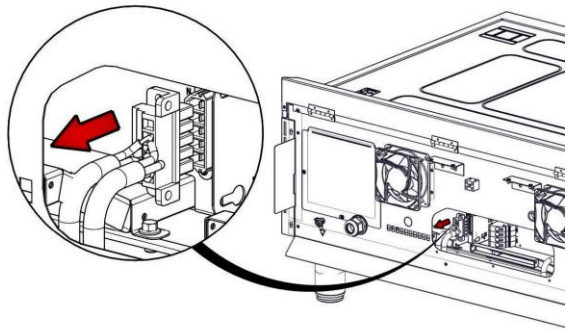

9.9.2

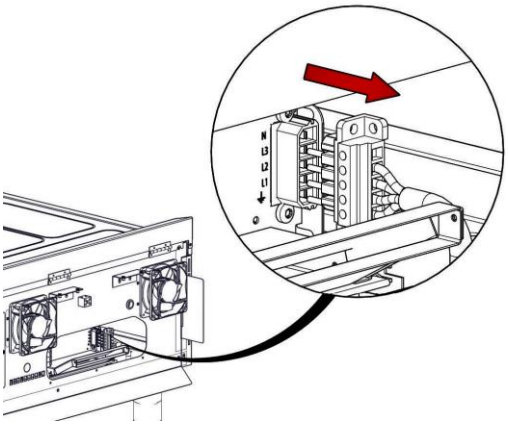

9.9.2

## 9.10 DISCONNECT COIL POWER CABLES

9.10.1 Remove control panels as detailed in section 9.1.

9.10.2 Remove rear fan cover as detailed in section 9.2.

9.10.3 Disconnect generator power cables as detailed in section 9.9.

9.10.4 Rotate catch on generator tray to enable tray to slide out.

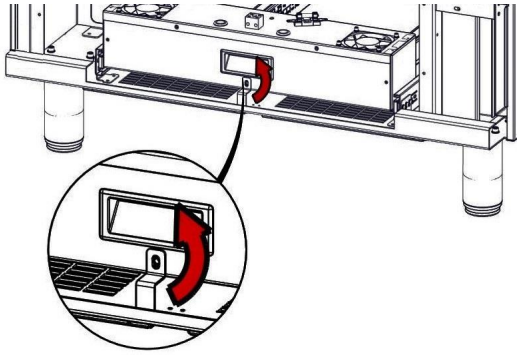

9.10.3

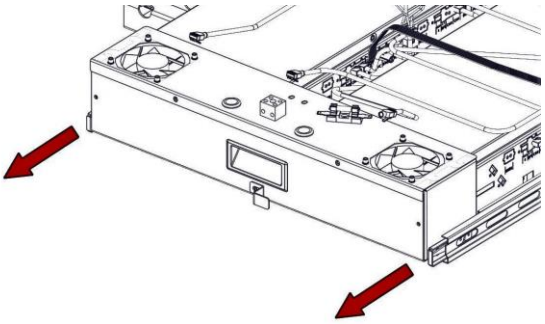

9.10.4

9.10.5 Gently slide out generator tray ensuring not to snag any cabling within the unit.

9.10.6 Disconnect coil power cable and screen from each generator.

| | |
|---|---|
| 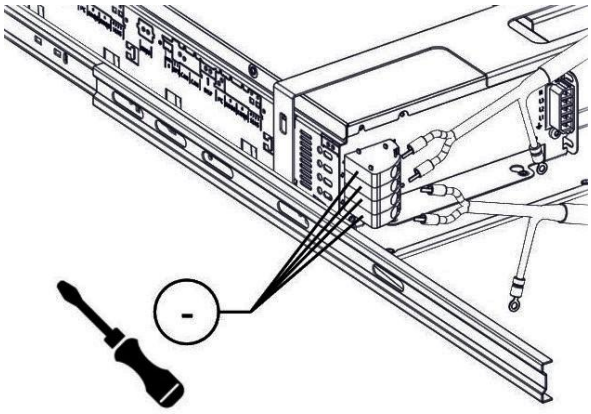 9.10.6 (Generator A shown) | 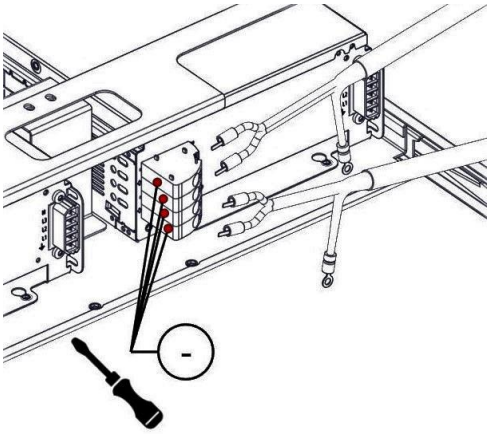 9.10.6 (Generator B shown) |

9.10.7 When re-fitting ensures all electrical connections are restored as detailed in the wiring diagram.

## 9.11 MEMORY STICK REMOVAL

Generators have been fitted with external Memory sticks; this contains specific operating parameters for the appliance.

9.11.1 Remove control panels as detailed in section 9.1.

9.11.2 Disconnect generator power cables as detailed in section 9.9.

9.11.3 Rotate catch on generator tray.

9.11.4 Gently slide out generator tray ensuring not to snag any cabling within the unit.

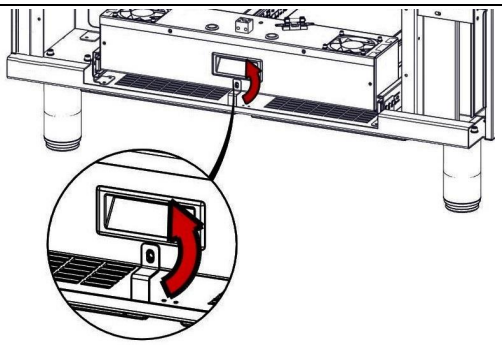

9.11.3

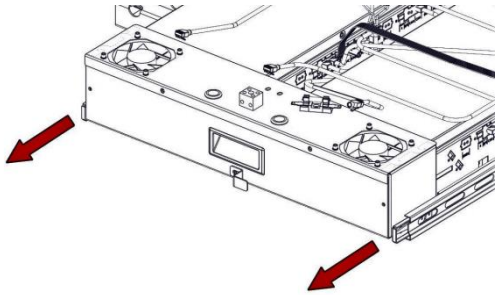

9.11.4

9.11.5 Un plug memory stick (see below image of memory stick locations for ref)

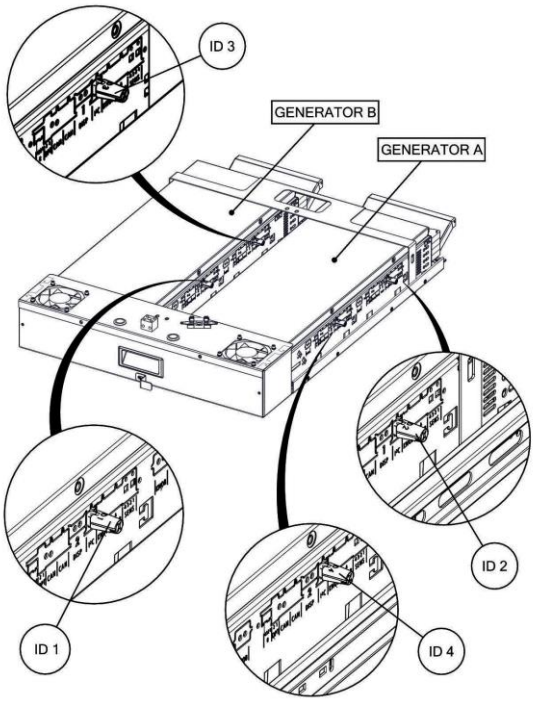


9.11.5

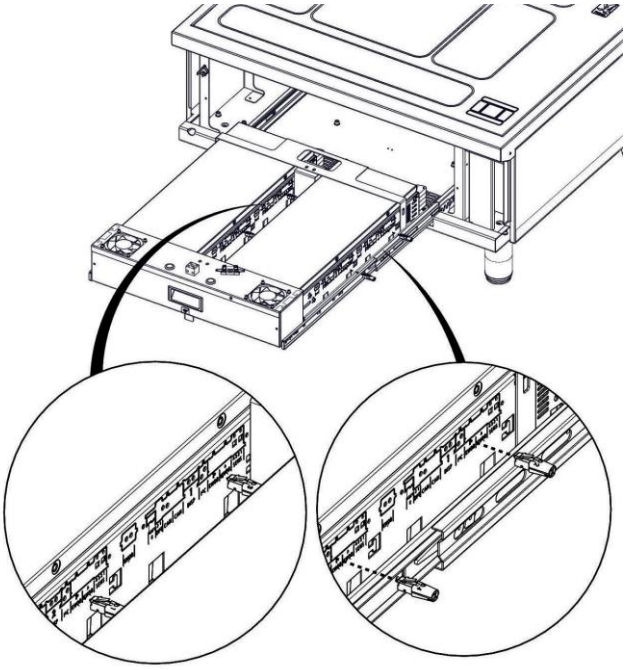

9.11.5

9.11.6 When re-fitting ensures all electrical connections & memory sticks are restored as detailed in the wiring diagram.

**Note:** When turning on the appliance the parameters are loaded from the memory stick to the generator.

## 9.12 GENERATOR REMOVAL

**BEFORE ATTEMPTING ANY MAINTENANCE, ISOLATE THE APPLIANCE AT THE MAINS SWITCH AND TAKE STEPS TO ENSURE THAT IT IS NOT INADVERTENTLY SWITCHED ON.**

9.12.1 Remove control panel as detailed in section 9.1.

9.12.2 Release and open hob as detailed in section 9.7.

9.12.3 Disconnect relevant generator power cables as detailed section 9.9.

9.12.4 Un-do screws on access panel and release relevant generator exhaust ducts from generator tray.

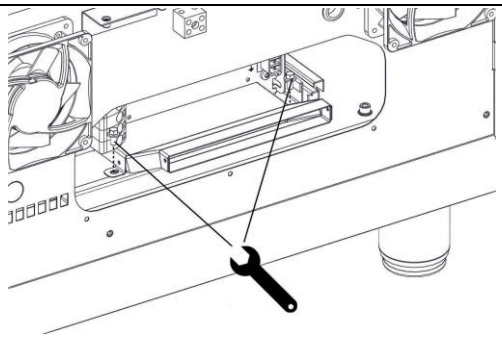

9.12.4 (Generator B exhaust duct)

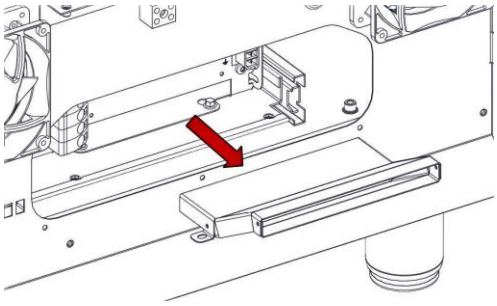

9.12.4 (Generator B exhaust duct)

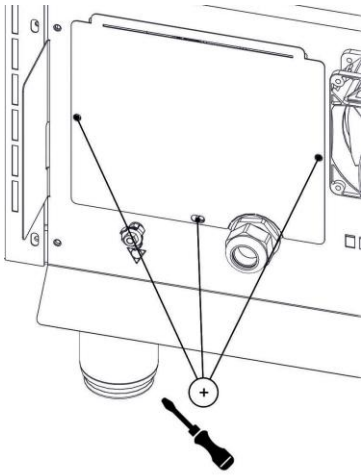

9.12.4

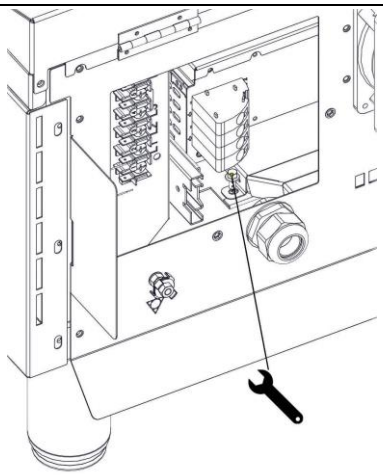

9.12.4 (Generator A exhaust duct)

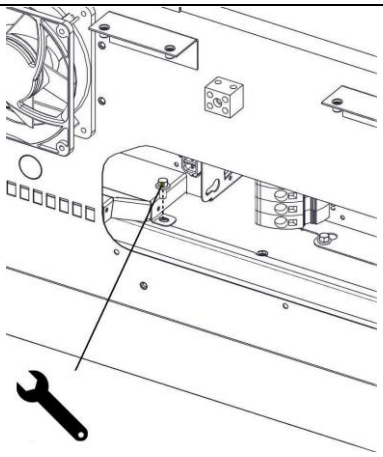

9.12.4 (Generator A exhaust duct)

9.12.5 Disconnect relevant earth cable from relevant generator to coil carrier supports.

9.12.6 Disconnect relevant coil power cables as detailed in section 9.10.

9.12.7 Un-plug relevant data & sensor cables from relevant generator

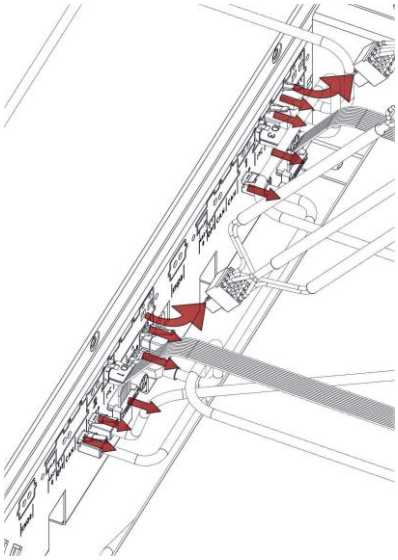

9.12.5 (Generator B shown)

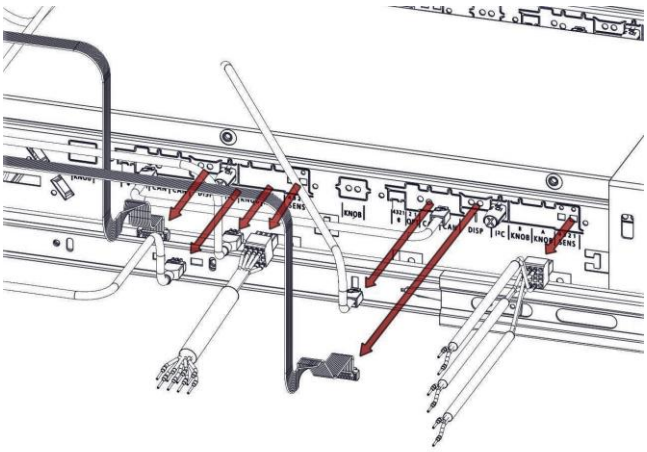

9.12.5 (Generator A shown)

9.12.8 Un-do two screws on fixing strap.

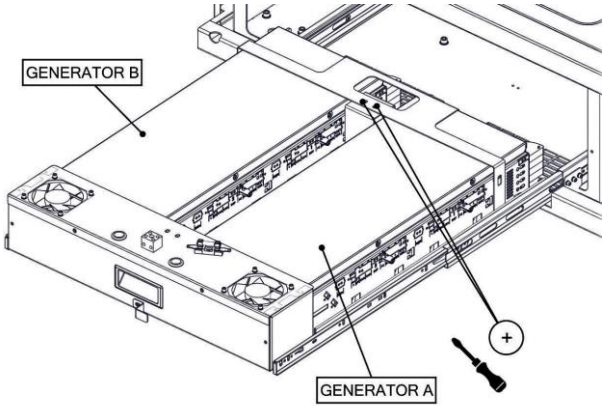


9.12.8

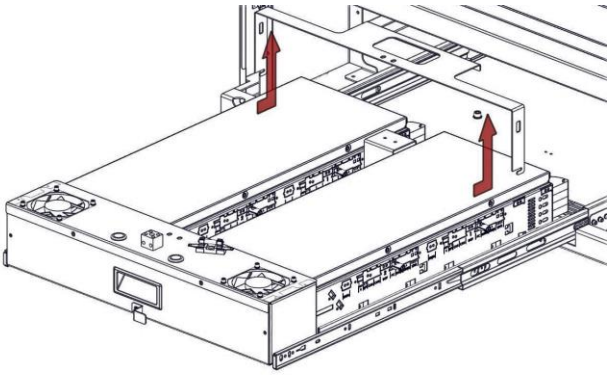

9.12.9

9.12.9 Push back fixing strap and pull up to release (**Note**: fixing strap is hooked into generator tray).

9.12.10 Tilt Generator up from rear and lift from tray.

9.12.11 When re-fitting ensures all electrical connections & memory sticks are restored as detailed in the wiring diagram.

## 9.13 INDUCTION HEATER COILS REMOVAL

**BEFORE ATTEMPTING ANY MAINTENANCE, ISOLATE THE APPLIANCE AT THE MAINS SWITCH AND TAKE STEPS TO ENSURE THAT IT IS NOT INADVERTENTLY SWITCHED ON.**

9.13.1 Release and open hob as detailed section 9.7.

9.13.2 Carefully relocate control panel below the unit without disconnecting wiring.

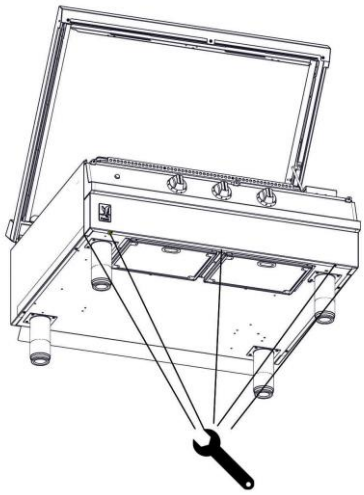

9.13.2

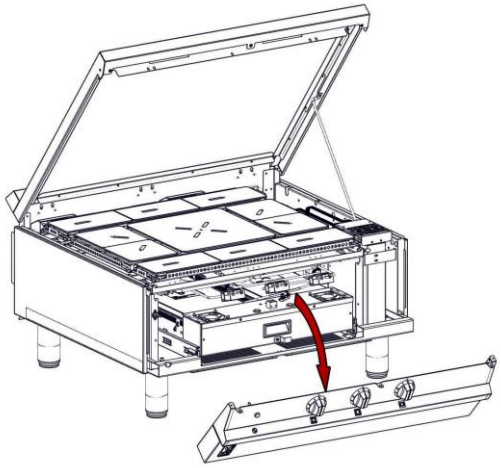

9.13.2

9.13.3 Disconnect relevant coil power wires as detailed in section 9.10.

9.13.4 Disconnect relevant earth wires from coil supports.

9.13.5 Whilst feeding sensor and power coil cables lift relevant coil carrier from unit

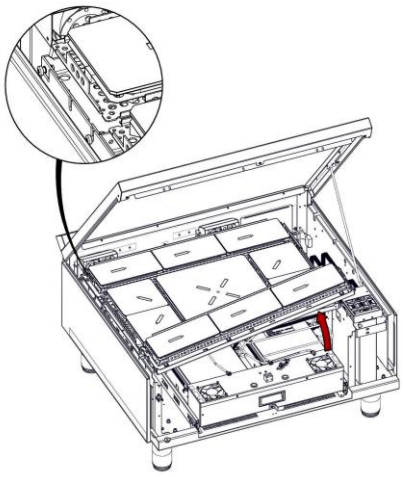

9.13.5

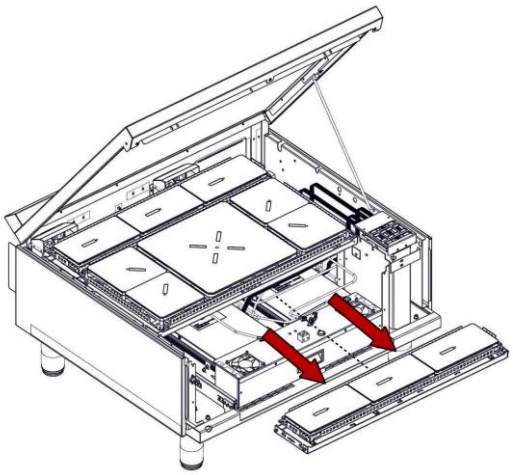

9.13.5

9.13.6 When re-fitting ensure all electrical connections are restored as detailed in the wiring diagram. -

## 9.14 REAR COOLING FAN REMOVAL

9.14.1 Remove fan rear cover as per section 9.2.

9.14.2 Disconnect relevant fan leads from terminal block and undo four screws on fan to release.

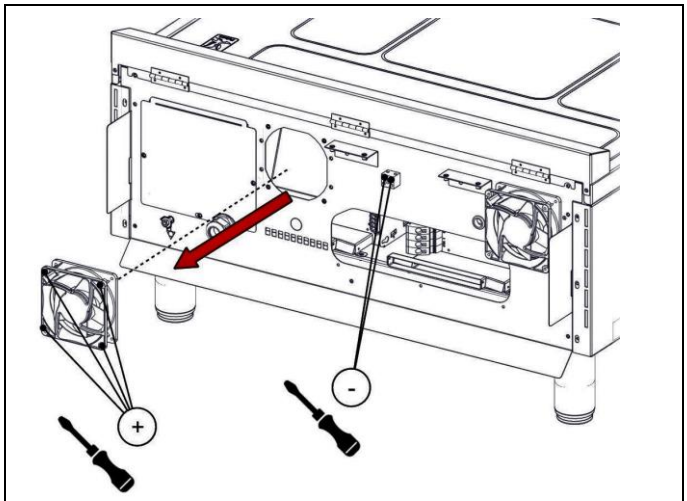


9.14.2

**Note:** Two fans extract the hot air from inside the appliance.

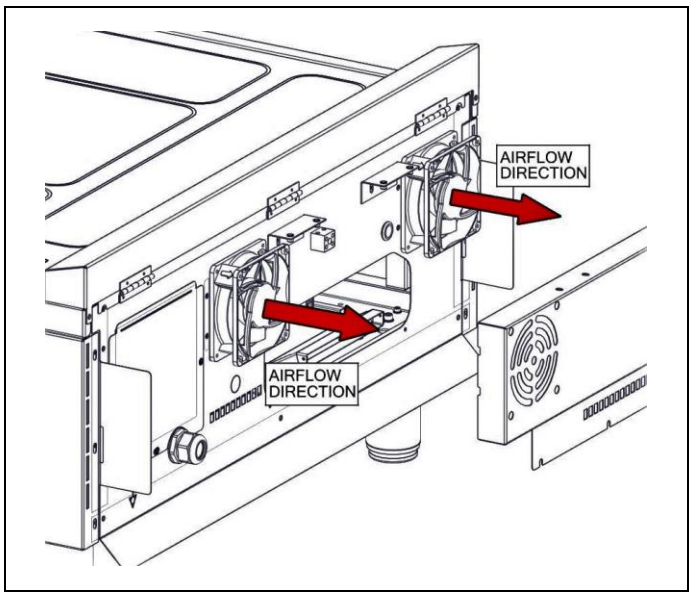


9.14.3 When re-fitting ensures all electrical connections are restored as detailed in the wiring diagram.

## 9.15 CAPICTOR REMOVAL

**BEFORE ATTEMPTING ANY MAINTENANCE, ISOLATE THE APPLIANCE AT THE MAINS SWITCH AND TAKE STEPS TO ENSURE THAT IT IS NOT INADVERTENTLY SWITCHED ON.**

**WARNING: UNIT IS FITTED WITH A CAPACITOR**

**BEFORE REMOVING ANY LINKS FROM THE MAINS TERMINAL OR DISCONNECTING THE MAINS LEADS, ENSURE THE CAPACITOR IS DISCHARGED OF ANY STORED VOLTAGE.**

**THIS CAN BE ACHIVED BY BRIDGING THE LIVE TERMINALS OF THE MAINS CONNECTOR WITH THE EARTH LEAD THAY SHALL BE CONNECTED TO THE APPLIANCE.**

9.15.1 Un-fasten screws on rear terminal plate.

9.15.2 Un-plug capacitor leads from terminal block.

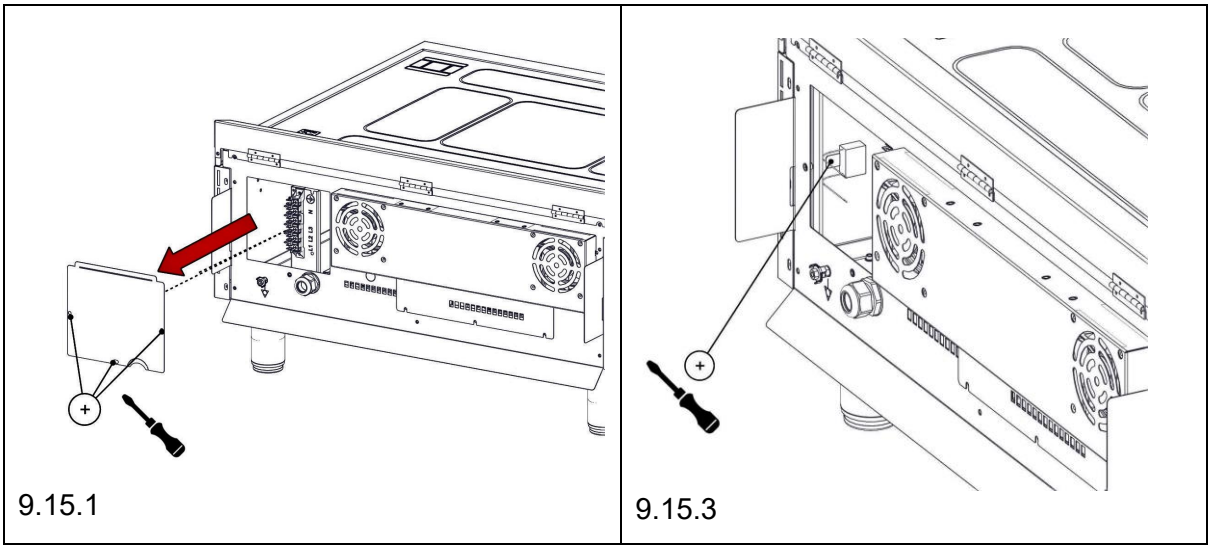

9.15.1 9.15.3

9.15.3 Un-fasten screw on capacitor mounting plate to release.

9.15.4 When re-fitting ensures all electrical connections are restored as per detailed in wiring diagram.

## 9.16 CIRCUIT DIAGRAMS

### 9.16.1 E3907I Circuit diagram

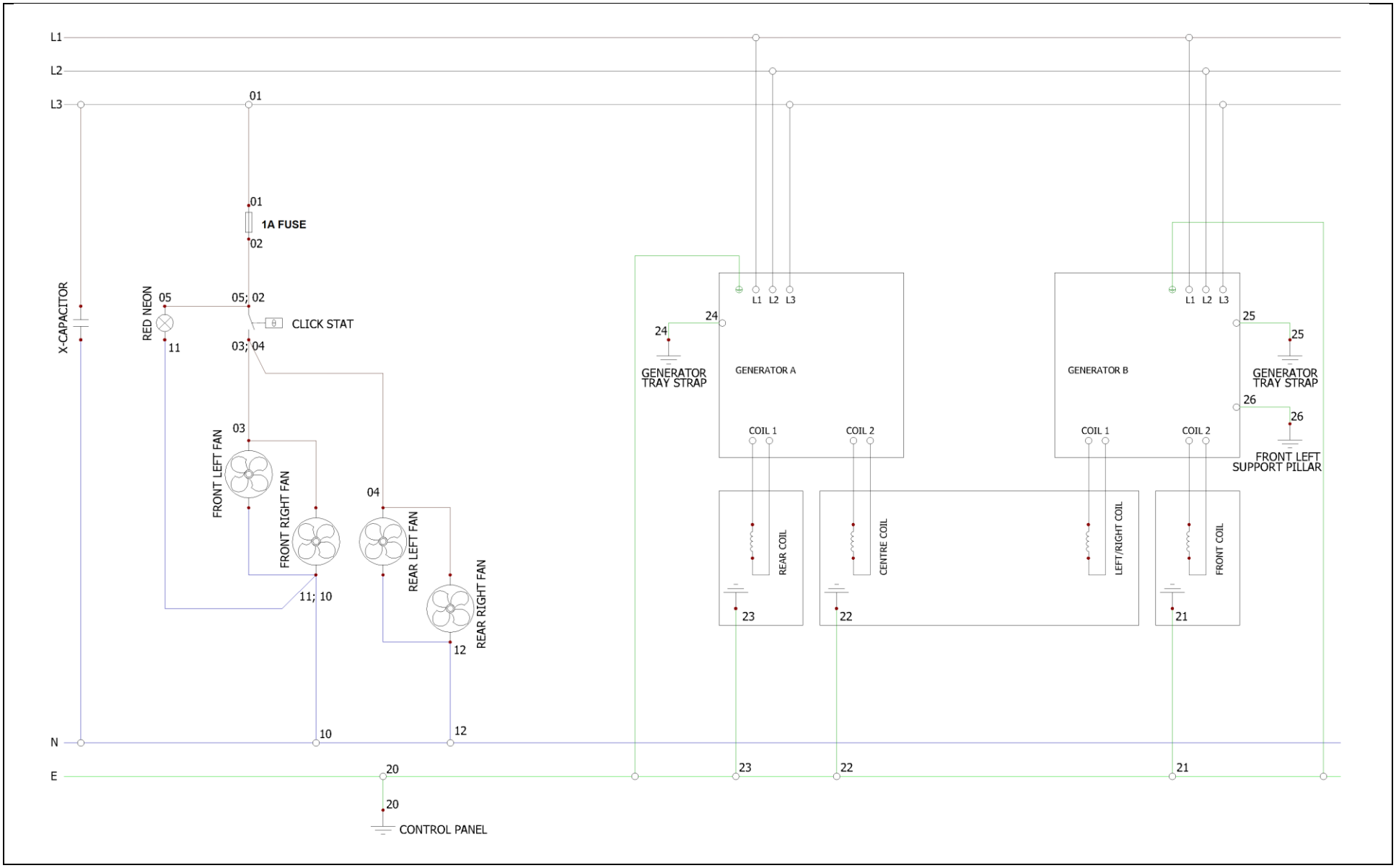

## 9.17 WIRING DIAGRAMS

### 9.17.1 E3907i Fan & neon wiring diagram

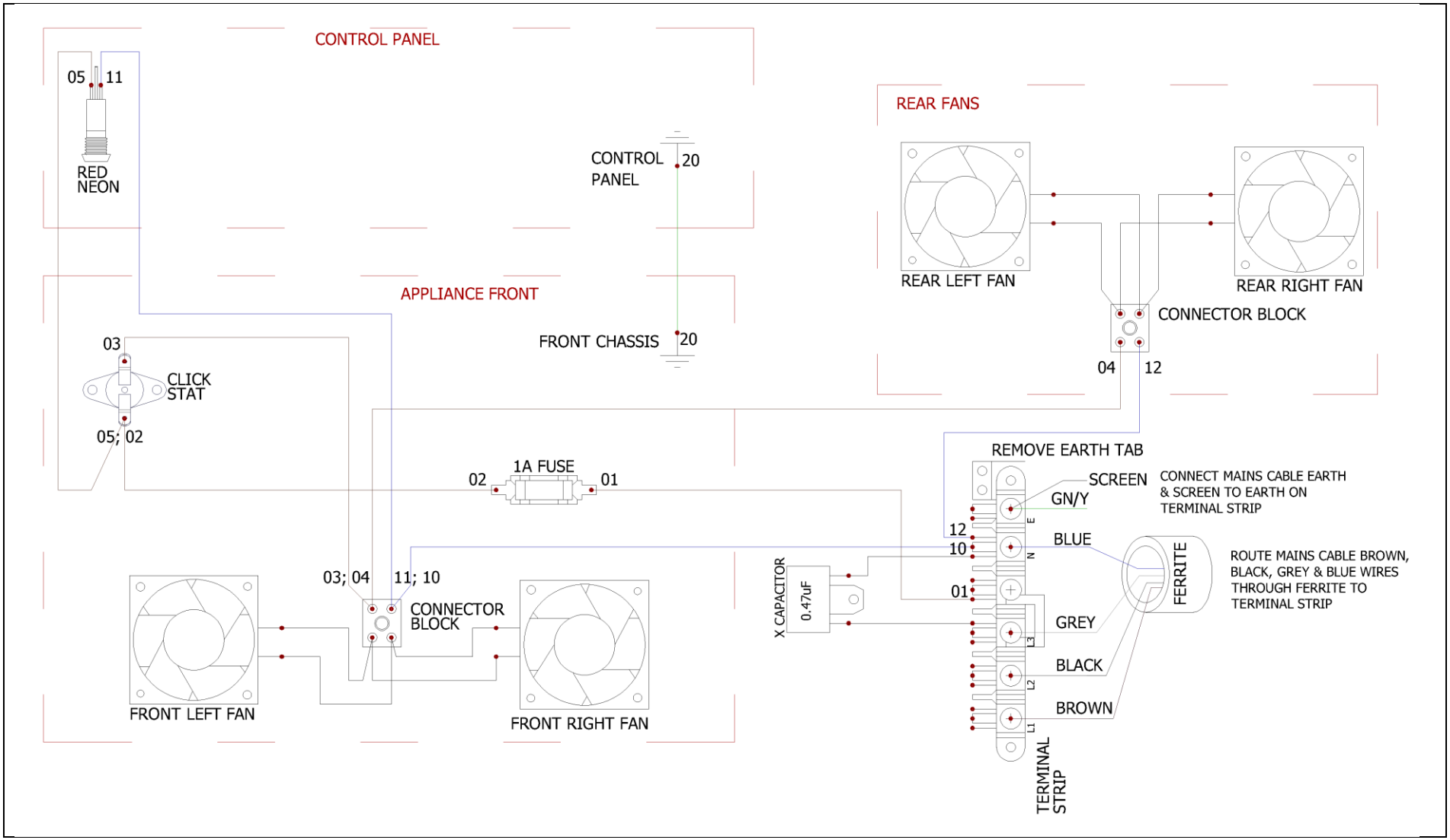

## 9.17.2 E3907i Generator A diagram

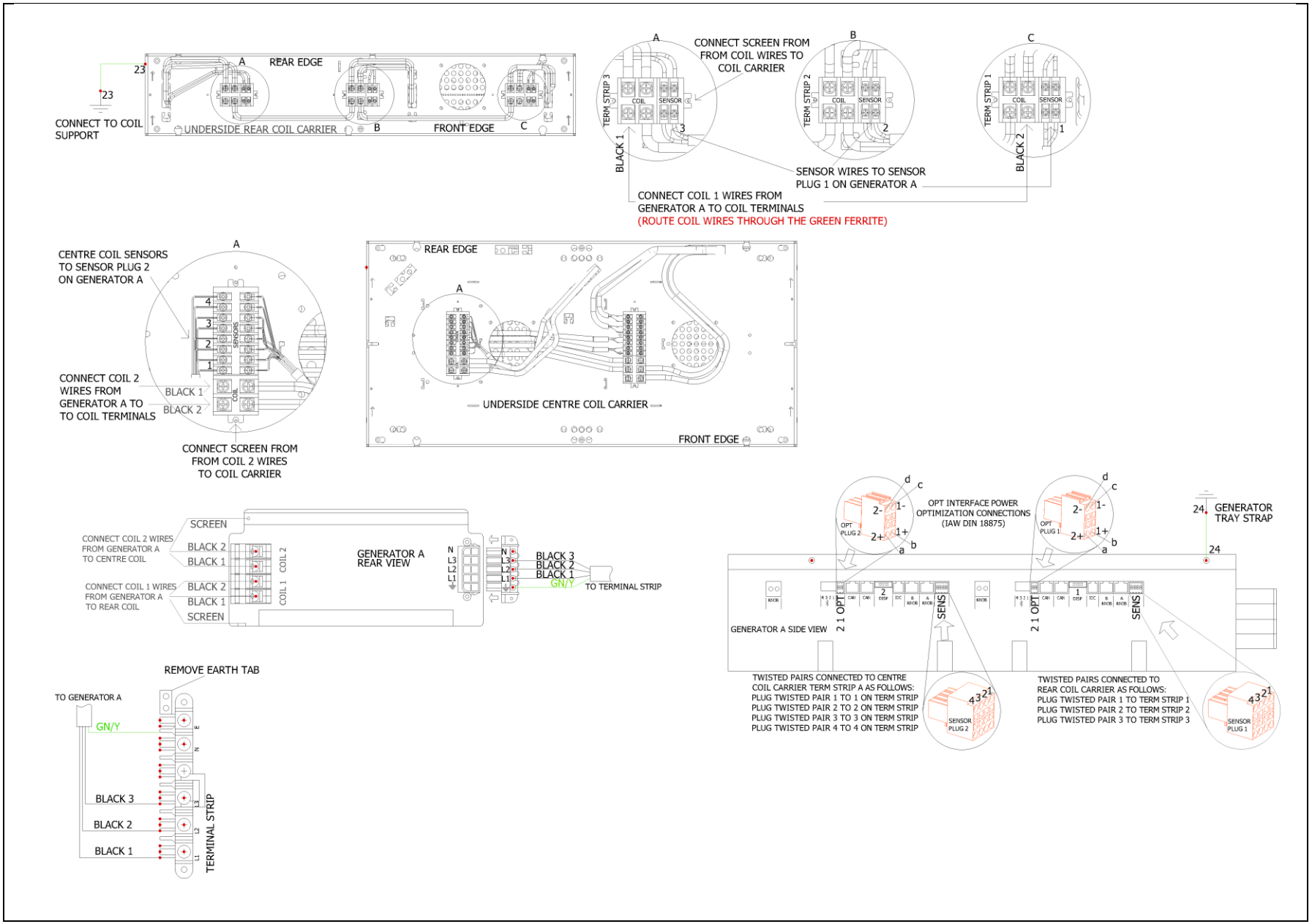

## 9.17.3 E3907i Generator B diagram

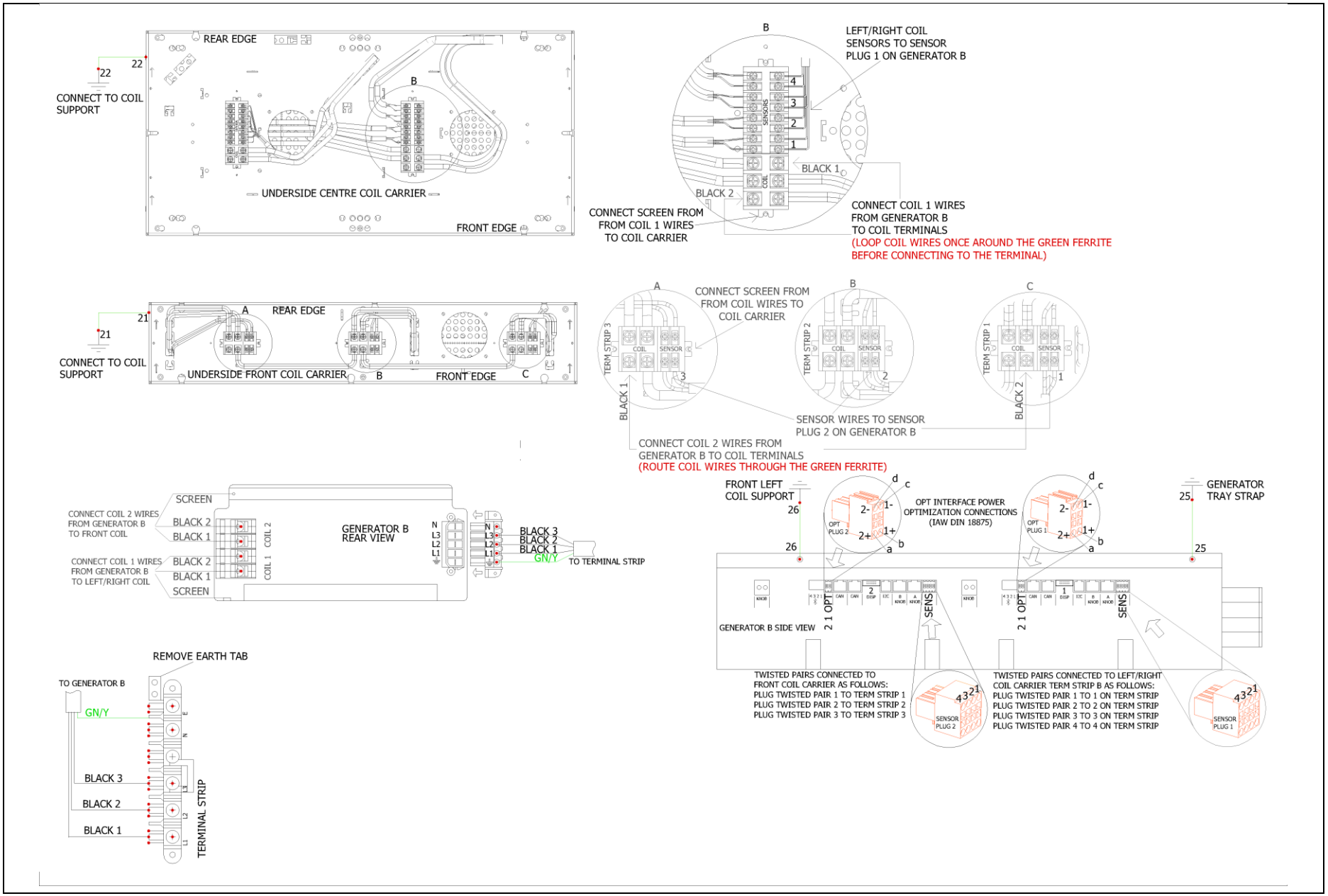

## 9.17.4 E3907i Control and data wiring diagram

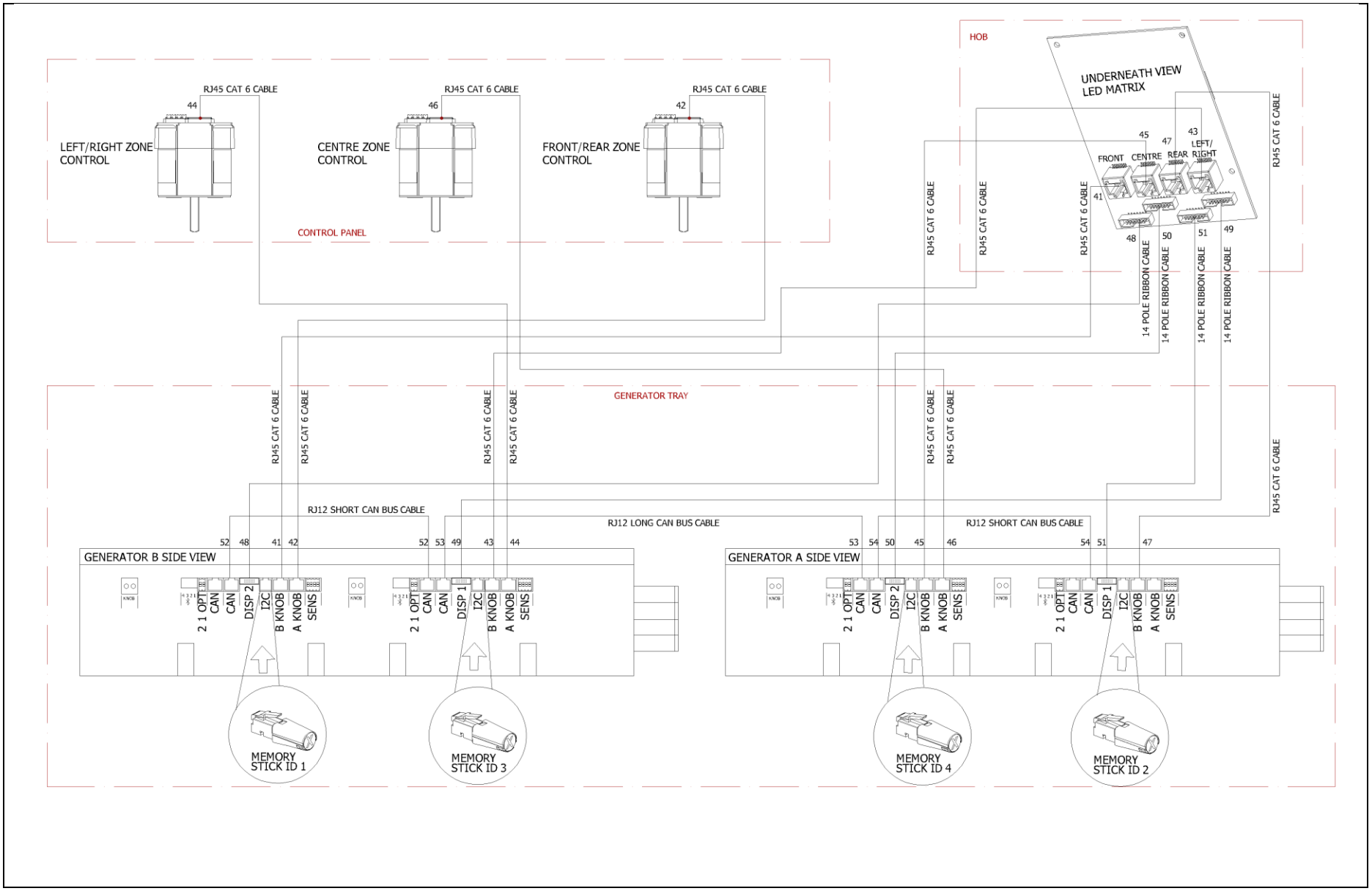

# 10.0 ACCESSORIES

## 10.1 ENERGY OPTIMIZATION KIT (DIN 18875)

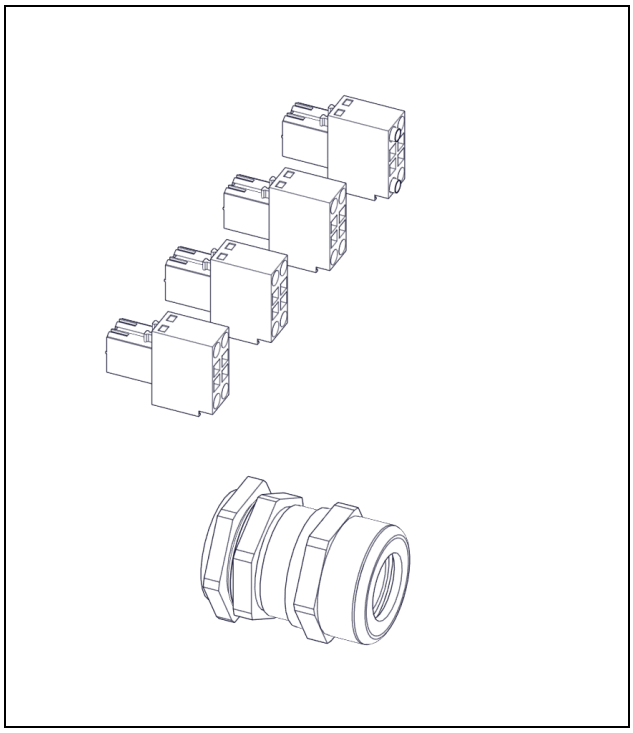

**Note(s)** a) 8-off 2 Core SIHF-J 0.34²mm cables assemblies would be also required. These are not supplied due variable length requirements.

b) See energy optimisation connection manual “T101083” for further wiring. information.

# 11.0 FAULT FINDING

## 11.1 ERROR CODES

11.1.1 Most faults can be rectified by simply switching unit off for 10 seconds. After this time, turn power back on at mains supply. If fault continues to occur after such action, then please refer to the table. This will provide a solution to rectify the condition.

| ERROR CODE | DESCRIPTION | POSSIBLE CAUSE OF ERROR | REMEDY |
|---|---|---|---|
| U | Pan not detected | Wrong pot size, Wrong pot grade of material. | • Put the wok / pan on the cooking zone.<br>• Use a bigger pan.<br>• Use suitable Induction pans.<br>• Use suitable Induction pans. |
| E02 | Coil power is too strong | | • Use suitable Induction pans.<br>• Call engineer |
| E03 | The maximum device temperature is exceeded. | Air supply to appliance is restricted | • Let the appliance cool down.<br>• Check air filters are clean and air ducts are clear of any obstructions. |
| E04 | Empty cooking protection is active. | Empty pans | • Turn knob to zero position.<br>• Remove empty pans from hob.<br>• Allow hob to cool down. |
| E05 | Fault in cooking level specification | | • Vary the knob settings to to check wiring. operation. |
| E06 | Expiry of the permitted hours of operation | | • Call the engineer. |
| E07 | IGBT-temperature sensor – error | | • Call the engineer |
| E08 | Device has excessive temperature | Air supply to appliance is restricted.<br>Ambient temperature is too high.<br>Overload of cooktop or empty boiled cookware | • Let the appliance cool down.<br>• Check air filters are clean and air ducts are clear of any obstructions.<br>• Reduce number of pans on hob. |
| E09 | The hob temperature from the pan detection is too hot | Air supply to appliance is restricted.<br>Overload of cooktop or empty boiled cookware. | • Let the appliance cool down. |
| E10 | power supply under voltage (<180VAC) | | • Check the mains fuse.<br>• Ensure stable power supply |

| ERROR CODE | DESCRIPTION | POSSIBLE CAUSE OF ERROR | • REMEDY |
|---|---|---|---|
| E11 | Communication error | Error/interruption of data bus | • Call the engineer |
| E12 | Hob excessive temperature | | • Reduce the cooking level.<br>• Switch of appliance and let the appliance cool down.<br>• ControlInduc® pans should not be used in continuous operation. |
| E13 | Fault in temperature measure | | • Call the engineer. |
| E14 | | | • Call the engineer to contact the manufacturer. |
| E15 | Mutual interaction of wo cooking fields | | • Call the engineer. |
| E16 | | | • Call the engineer. |
| E17 | Current monitoring error | | • Call the engineer. |
| E18 | | | • Call the engineer. |
| E19 | Connection error between coil and generator | Control coil connection<br><br>Control coil cable for interruption | • Call the engineer. |
| E20 | Safety shutdown due to discrepancy between security and main processor | No double release / interrupt power supply shortly | • Call the engineer. |
| E21 | Application sensor gradient survey | Power supply not corresponding to measured temperature change.<br><br>Verify position of application sensor | • Call the engineer. |
| E22 | Application sensor connection error | Control connection of external temperature sensor<br><br>Change configuration of device | • Call the engineer. |

| ERROR CODE | DESCRIPTION | POSSIBLE CAUSE OF ERROR | REMEDY |
|---|---|---|---|
| E23 | Overload | Check mains voltage.<br>Check the mains connection.<br>Magnetic coupling to others Induction systems reduce. | • Call the engineer. |
| E31 | Application sensor connection error | Check the connection of application-specific temperature sensor of coil A<br><br>Change the configuration of the device. | • Call the engineer. |
| E32 | Application sensor excess temperature | Turn off coil A and let cool down.<br><br>Change the configuration of device | • Call the engineer. |
| E33 | Connection-error coil temperature sensor | Check the wiring of the temperature sensor of Coil A<br><br>Change the configuration of device | • Call the engineer. |
| E34 | Coil excess temperature | Turn off the heating area of coil A and let cool down.<br><br>Change the configuration of the device | • Call the engineer. |
| E41 | Application sensor connection error | Check the connection of application application-specific temperature sensor of coil B.<br>Change the configuration of the device. | • Call the engineer. |
| E42 | Application sensor excess temperature | Turn off coil A and let cool down.<br>Change the configuration of the device. | • Call the engineer. |
| E43 | Connection-error coil temperature sensor | Check the wiring of the temperature sensor of Coil B<br>Change the configuration of the device. | • Call the engineer. |
| E44 | Coil excess temperature | Turn off the heating area of coil B and let cool down.<br><br>Change the configuration of the device. | • Call the engineer. |

| ERROR CODE | DESCRIPTION | POSSIBLE CAUSE OF ERROR | • REMEDY |
|---|---|---|---|
| E50 | Coil excess temperature | Turn off customer specific coil and let cool-down.<br><br>Change the configuration of the device. | • Call the engineer. |
| E51 | Connection-error coil temperature sensor | Check wiring of temperature sensor of customer-specific coil.<br><br>Change the configuration of the device. | • Call the engineer. |
| E52 | Pyrometer excess temperature | Turn off induction heating and let cool down.<br><br>Change the configuration of the device. | • Call the engineer. |
| E53 | Pyrometer connection error | Check wiring to infrared thermometer.<br><br>Change the configuration of the device. | • Call the engineer. |
| E54 | Application plug | Control application-specific plug-system. | • Call the engineer. |
| E55 | Pyrometer gradient control | Power supply not corresponding to measured temperature change.<br><br>Check position of pyrometer.<br><br>Change the configuration of the device. | • Call the engineer. |
| E56 | Ferrite excess temperature | Change the configuration of the device. | • Turn off device and let cool down.<br>• If problem persists, call the engineer. |
| E57 | Connection-error ferrite temperature-sensor | Check wiring of temperature sensor.<br>Change the configuration of the device | • Call the engineer. |
| E58 | Dynamic in temperature measuring too high | Control contacts of temperature sensor.<br>Change the configuration of the device. | • Call the engineer. |

| ERROR CODE | DESCRIPTION | POSSIBLE CAUSE OF ERROR | • REMEDY |
|---|---|---|---|
| P | Protection of restart after disruption of current | Change the configuration of the device. | • Turn the knob briefly off and select cooking level again.<br>• Call engineer |
| F | High heat sink temperature | Insufficient air flow to generators. | • Switch off the cooking zone and allow to cool down.<br>• Clean air filter trap |
| U | Phase failure | Loss of phase on supply.<br>Fuse failure. | • Control power supply<br>• Check fuses |
| ● | Reduction of performance | Energy optimising active.<br>Phase failure.<br>Overheat control device active. | • Call engineer.<br>• Turn off the cooking zone and allow it to cool. |

| FAULT | POSSIBLE CAUSES | REMEDY | USER | *ENG |
|---|---|---|---|---|
| Unit will not turn ON | No power to unit | Check mains power is connected and turned on | ✓ | |
| | Fuse has blown | Check the Fuse behind the cover panel (see section 9.3) and replace as necessary. | | ✓ |
| Hob cooking zones will not operate | Switch at off position | Change the hob control knob to position 1 | ✓ | |
| A reduction in performance on hob cooking zones. | Blocked air filter | Clean Air filter (See section 5.1.2) | ✓ | |
| | Damaged pot/pan | Replace pot/pan | ✓ | |
| Pot/pan slow to heat | Low | | | |
| | Poor quality induction pot/pan | Replace with quality induction pot/pan | ✓ | |
| | Faulty Induction heater | Call Engineer | ✓ | |

| PROBLEM | POSSIBLE CAUSES | REMEDY | USER | *ENG |
|---|---|---|---|---|
| Food keeps burning | The dial setting is too high | Lower dial setting | ✓ | |

***ENG** Service engineer only.

# 12.0 SPARE PARTS

| PART DESCRIPTION |
|---|
| Power neon red |
| LED digital display pcb |
| Control panel |
| Control knob |
| Knob coding switch |
| Front hob cooling fan |
| Fuse |
| Capacitor |
| Rear hob cooling fan |
| Hob cooling thermostat |
| Generator A |
| Generator B |
| Memory Stick ID1 |
| Memory Stick ID2 |
| Memory Stick ID3 |
| Memory Stick ID4 |
| Induction Heater on Carrier (Front or Rear Zone) |
| Induction Heater on Carrier (Lh + Centre + Rh Zone) |
| Air Filter |
| Cable Gland |

When ordering spare parts please quote the following:

**Model Number**
**Serial number**

This information will be found on data plate attached to the appliance.
Visit our website for further spares information.

# 13.0 SERVICE INFORMATION

This unit carries an extensive mainland UK warranty. The warranty is in addition to and does not change your statutory or legal rights.

The warranty policy can be found on our website which details the conditions of the warranty and the exclusions.

https://www.falconfoodservice.com/info-centre/policy

Service calls to equipment under warranty will be carried out in accordance with the conditions of sale.

Warranty calls can be made between 8:30 am and 5:00 pm weekdays only.

To ensure your warranty enquiry is handled as efficiently as possible, ensure you have the following appliance information prior to calling us:

1. Model number – found on data plate.
2. Serial number – found on data plate.
3. Brief description of the issue

To contact Falcon for a warranty issue dial (UK only) 01786 455 200 and select Warranty Issues from the menu.