PASS-THROUGH WAREWASHER AX-100BC DD

Pass-through glass- and dishwasher. Rack size 500 mm x 500 mm and door clearance 430 mm.



Sales Description

Sani-Control: guaranteed disinfection. Constant high temperatura rinse system for optimal disinfection.
Exclusive Hydroblade™ washing arms: maximum effectiveness.
3-stage filtering system.

Sani-Control guarantee

- ✓ GUARANTEED DISINFECTION in compliance with standard DIN 10534.
- ✓ THERMAL LOCK function: Ensures that rinsing will be carried out at the ideal temperature to disinfect the dishes.
- ✓ CONSTANT HIGH TEMPERATURE RINSE system for optimal disinfection.
- ✓ The PRESSURE PUMP guarantees effective high-pressure rinsing.
- ✓ WRAS certified.

New recessed bodywork

- ✓ Ergonomic design with rounded corners to prevent the accumulation of dirt and facilitate cleaning.
- ✓ Compact tank volume (50% water saving compared to the previous range).

Hydroblade™ washing arms

- ✓ Redesigned nozzles for greater washing performance.
- ✓ The “monoblock” design delivers durability and resistance to impacts.
- ✓ 30% savings in water consumption during rinsing compared to the previous range.

3-stage filter system: surface, tank and extraction

- ✓ Keeps the washing water in optimal conditions to maintain constant washing performance.

Designed to last

- ✓ “Flow” opening mechanism: allows the hood to be raised with less effort.
- ✓ High load capacity 43 cm: suitable for GN 1/1 and Euronorm.
- ✓ Stainless steel surface filters for greater stability and resistance during intensive use.

Warewashing, made simple

- ✓ TEMPERATURE DISPLAY.
- ✓ Control panel with IP65 humidity protection.

You will never WASH ALONE

- ✓ Tech-Services: our team of technicians will help you so that your machine is always ready for use.
- ✓ Design Services: tell us what your needs are and we will advise you.
- ✓ 60 years of experience and know-how at your disposal.

Includes

- ✓ Detergent dispenser.
- ✓ Drain pump with level sensor. Proactive tank water renewal.
- ✓ Type-A air break.WRAS approved break tank.
- ✓ Rinse aid pump.
- ✓ 1 glasses basket.
- ✓ 1 mixed basket (plates).
- ✓ 1 small basket for cutlery.

Optional

- ❑ Automatic resin regeneration water softener with salt detector.

Accessories

- ❑ Tables for pass-through dishwashers
- ❑ Manual water softeners
- ❑ Automatic water softeners
- ❑ 500 x 500 mm baskets
- ❑ Inserts & supplements
- ❑ Central sorting tables
- ❑ Double connection central sorting table
- ❑ Prewashing tables for pass-through and rack conveyor dishwashers
- ❑ Connecting tables for pass-through dishwashers and rack conveyors
- ❑ Reverse osmosis devices OS-140
- ❑ Drain pumps for AX / UX dishwashers

Specifications

Basket dimensions: 500 mm x 500 mm
Useful height: 430 mm
Cycles: 3
Cycle duration: 120 / 180 / 210”
Production baskets / hour: 30 / 24 / 17
Boiler capacity: 12 l
Wash tank capacity: 25 l

Consumption and savings

- ✓ Water consumption/cycle: 2.8 l
- ✓ Automatic saving mode in: y’

SAMMIC, S.L. · Basarte, 1
20720 AZKOITIA (Gipuzkoa) · SPAIN

product sheet
updated 09/02/2026

Copyright 2026 © Sammic S.L.

PASS-THROUGH WAREWASHER AX-100BC DD

Pass-through glass- and dishwasher. Rack size 500 mm x 500 mm and door clearance 430 mm.

Energy consumption

Loading__

- ✓ Pump: 750 W / 1 Hp
- ✓ Tank: 2500 W
- ✓ Boiler: 6000 W
- ✓ Total loading: 6700 W

External dimensions (W x D x H)

- ✓ Width:648 mm (Wide with handle: 725 mm)
- ✓ Depth: 756 mm (Bottom with handle: 835 mm)
- ✓ Height: 2000 mm / 1508 mm

Temperature

- ✓ Rinse temperature: 87ºC

Crated dimensions
760 x 860 x 1530 mm
Gross weight: 123 kg

Available Models

1303313	AX-100BC 230/50/1 DD
1303314	AX-100BC 400/50/3N DD
1303317	AX-100BCD 230/50/1 DD
1303318	AX-100BCD 400/50/3N DD

** Ask for special versions availability*

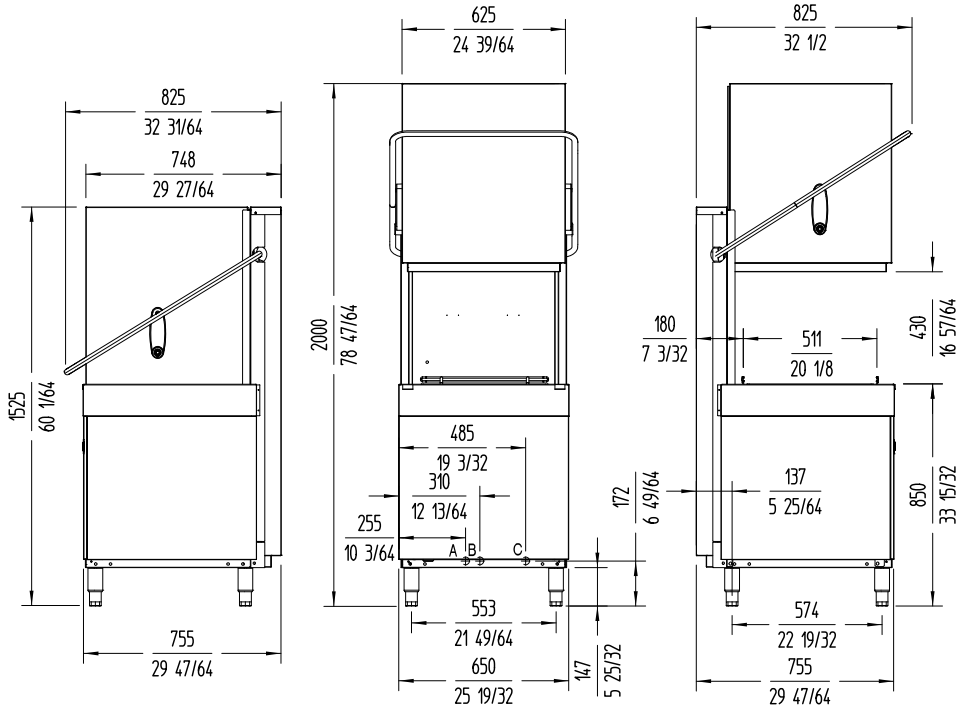

A: Entrada de agua 3/4" GAS.
B: Tubo de desague Ø30 mm.
C: Cable conexión.

sammic.co.uk
Food Service Equipment Manufacturer
Unit 2, Trevanth Road
Troon Industrial Park
LE4 9LS - Leicester
uksales@sammic.com
Tel.: +44 0116 246 1900

Project	Date
Item	Qty
Approved	

product sheet
updated 09/02/2026

Copyright 2026 © Sammic S.L.