GLASSWASHER AX-40B 230/50/1

Rack size 400 mm x 400 mm and door clearance 300 mm.

1303090





Sales Description

Sani-Control: guaranteed disinfection.
Embedded bodywork and easy-grip door: hygienic and ergonomic.
Exclusive Hydroblade™ washing arms: maximum effectiveness.
3-stage filtering system.
Double-walled body (partial).

Sani-Control guarantee

- ✓ GUARANTEED DISINFECTION in compliance with standard DIN 10534.
- ✓ THERMAL LOCK function: ensures that rinsing will be carried out at the ideal temperature to disinfect the dishes.

New recessed bodywork

- ✓ Ergonomic design with rounded corners to prevent the accumulation of dirt and facilitate cleaning.
- ✓ Compact tank volume (50% water saving compared to the previous range).
- ✓ Embedded basket guides

Hydroblade™ washing arms

- ✓ Redesigned nozzles for greater washing performance.
- ✓ The “monoblock” design delivers durability and resistance to impacts.
- ✓ 30% savings in water consumption during rinsing compared to the previous range.

3-stage filter system: surface, tank and extraction

- ✓ Keeps the washing water in optimal conditions to maintain constant washing performance.
- ✓ The surface filters feature an “easy-on” design and can be quickly removed without having to disconnect the washing arms.

“Easy grip” door: new design with integrated door handle

- ✓ The integration of the components provides greater resistance and robustness.
- ✓ Designed to have no corners or areas that are difficult to access: prevents deposits of dirt and facilitates cleaning.
- ✓ Its ergonomic handle provides a perfect grip, even with wet hands.
- ✓ Double-walled door with safety microswitch and high quality seal.
- ✓ 30 cm load capacity: high versatility for washing a wide range of glasses and even medium-sized dishes.

Warewashing, made simple

- ✓ Active Xperience: simple and intuitive use.
- ✓ Dedicated cycles: selection of the ideal washing programme using icons.
- ✓ Electronic control panel with IP65 humidity protection.

You will never WASH ALONE

- ✓ Tech Services: our team of technicians will help you so that your machine is always ready for use.
- ✓ Design Services: tell us what your needs are and we will advise you.
- ✓ 60 years of experience and know-how at your disposal.

Includes

- ✓ Peristaltic detergent pump.
- ✓ Rinse aid pump.
- ✓ 1 glasses basket.
- ✓ 1 mixed basket (plates).
- ✓ 1 small basket for cutlery.

Optional

- ❑ Overflow drain pump. Tank water renewal by the principle of density.
- ❑ Double-level accessory for washing two baskets at the same time.

Accessories

- ❑ Manual water softeners
- ❑ Automatic water softeners
- ❑ 400 x 400 mm baskets
- ❑ Inserts & supplements
- ❑ High feet kit
- ❑ Reverse osmosis devices OS-140
- ❑ Stand for 400 x 400 mm glasswashers
- ❑ Double rack kits for AX/UX
- ❑ Drain pumps for AX / UX dishwashers

Specifications

Basket dimensions: 400 mm x 400 mm
Useful height: 300 mm

SAMMIC, S.L. · Basarte, 1
20720 AZKOITIA (Gipuzkoa) · SPAIN

product sheet
updated 05/03/2026

Copyright 2026 © Sammic S.L.

GLASSWASHER AX-40B 230/50/1

Rack size 400 mm x 400 mm and door clearance 300 mm.

1303090

WARE WASHING
COMMERCIAL COMPACT GLASSWASHERS

Cycle duration: 120/150/210 (por defecto) - 90/120/180 (opcional)" (Optional: 90 / 120 / 180")
Production baskets / hour: 30 / 24 / 17 (Optional: 40 / 30 / 20)
Boiler capacity: 3.2 l
Wash tank capacity: 9 l
Water consumption/cycle: 2.2 l

Energy consumption

- ✓ Consumption/cycle (kWh): 0,17 kWh
- ✓ Tank filling consumption: 0,39 kWh

Loading

- ✓ Pump: 250 W / 0.33 Hp
- ✓ Tank: 1200 W
- ✓ Boiler: 2500 W
- ✓ Total loading: 2750 W

Electrical supply: 230 V / 50 Hz / 1~ (12 A)
Electrical connection: 2P+G

External dimensions (W x D x H)

- ✓ Width:470 mm
- ✓ Depth: 537 mm
- ✓ Height: 710 mm

Net weight: 37.5 kg
Noise level (1m.): <69 dB(A)
Crated dimensions
525 x 615 x 820 mm
Gross weight: 43.5 kg

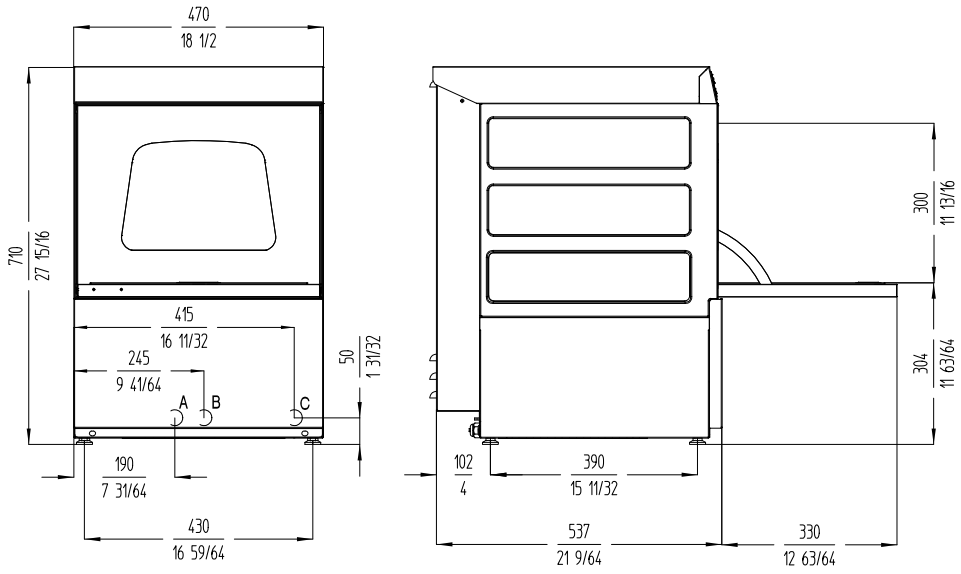

A: Entrada de agua 3/4" GAS.
B: Tubo de desague ø30 mm.
C: Cable conexión.

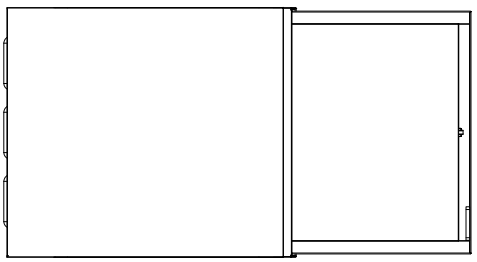

sammic.co.uk
Food Service Equipment Manufacturer
Unit 2, Trevanth Road
Troon Industrial Park
LE4 9LS - Leicester
uksales@sammic.com
Tel.: +44 0116 246 1900

Project	Date
Item	Qty
Approved	

product sheet updated **05/03/2026**

Copyright 2026 © Sammic S.L.